ST/38-1D

CHARFIX system 2

INTRAMEDULLARY OSTEOSYNTHESIS OF TIBIA WITH CHARFIX2 NAILS

- *IMPLANTS*
- *INSTRUMENT SET 15.0424.102*
- *SURGICAL TECHNIQUE*

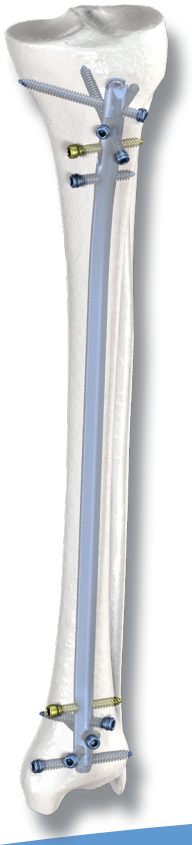

www.chm.eu

SYMBOLS DESCRIPTIONS

Ti	Titanium or titanium alloy
St	Steel
L	Left
R	Right
L R	Available versions: left/right
Len	Length
	Torx drive
	Torx drive cannulated
	Hexagonal drive
	Hexagonal drive cannulated
	Cannulated
	Locking
	Diameter
	Inner diameter
	Recommended length range for a particular nail
	Angle
16 ÷ 90	Available lengths
Ster Non Ster	Available in sterile/ non- sterile condition

	Caution - pay attention to the particular proceeding.
	Perform the activity with X-Ray control.
	Information about the next stages of the proceeding.
	Proceed to the next stage.
	Return to the specified stage and repeat the activity.
	Before using the product, carefully read the Instructions for Use supplied with the product. It contains, among others, indications, contraindications, side effects, recommendations and warnings related to the use of the product.
	The above description is not a detailed instruction of conduct. The surgeon decides about choosing the operating procedure.

www.chm.eu

Document No	ST/38-1D
Date of issue	18.06.2020
Review date	P-000-30.06.2020

The manufacturer reserves the right to introduce design changes.
Updated INSTRUCTIONS FOR USE are available at the following website: www.chm.eu

I. INTRODUCTION

CHARFIX system 2 - INTRAMEDULLARY OSTEOSYNTHESIS of TIBIA consists of:

- implants (*intramedullary nail, locking screws, end cap or compression screw*),
- instrument set for implant insertion and removal after treatment is finished,
- surgical technique.

The presented range of implants is made of materials in accordance with ISO 5832 standard.

Intramedullary osteosynthesis of tibia provides stable fixation of tibial shaft fractures.

Indications for use:

- comminuted fractures of tibial shaft,
- fractures of tibia and fibula,
- fractures with knee ligaments injury,
- tibial fractures with compartment syndrome,
- open fractures I, II, IIIA degree by Gustillo-Anderson,
- pathological fractures,
- mal-union of tibia shaft fragments after other treatment methods.

Depending on the type of fracture, CHARFIX system 2 allows for different types of stabilization of tibia shaft fragments.

Static stabilization

Static stabilization is used for comminuted fractures, when there is no axial stability of adjacent bone fragments.

For static stabilization, at least two distal and two proximal holes should be used for locking the nail with screws.

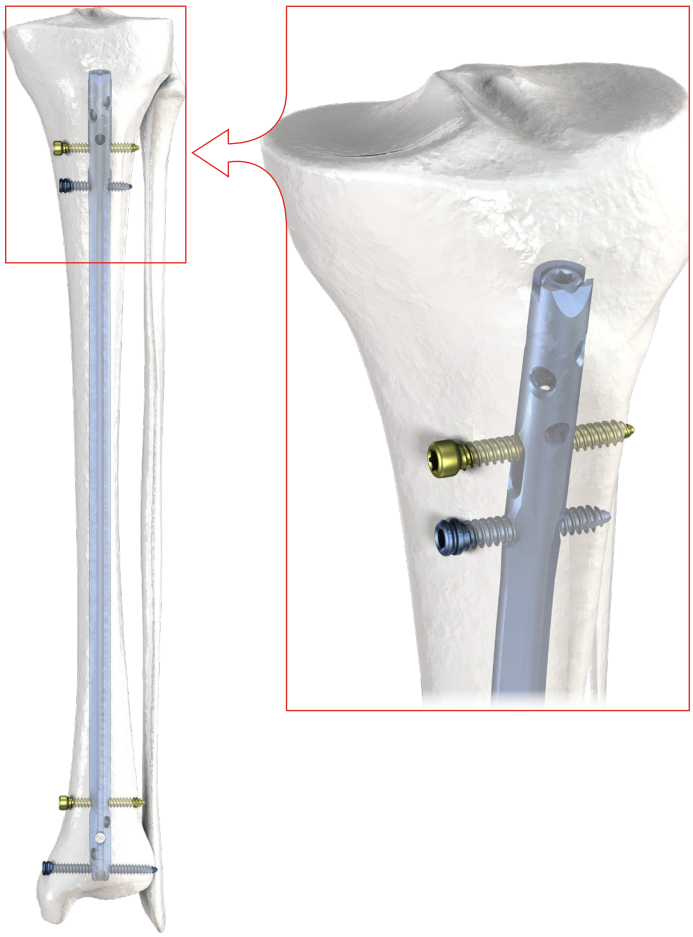

Reconstructive stabilization

Holes placed at the top of the nail allow for multiaxial fixation of fractures of the proximal tibia.

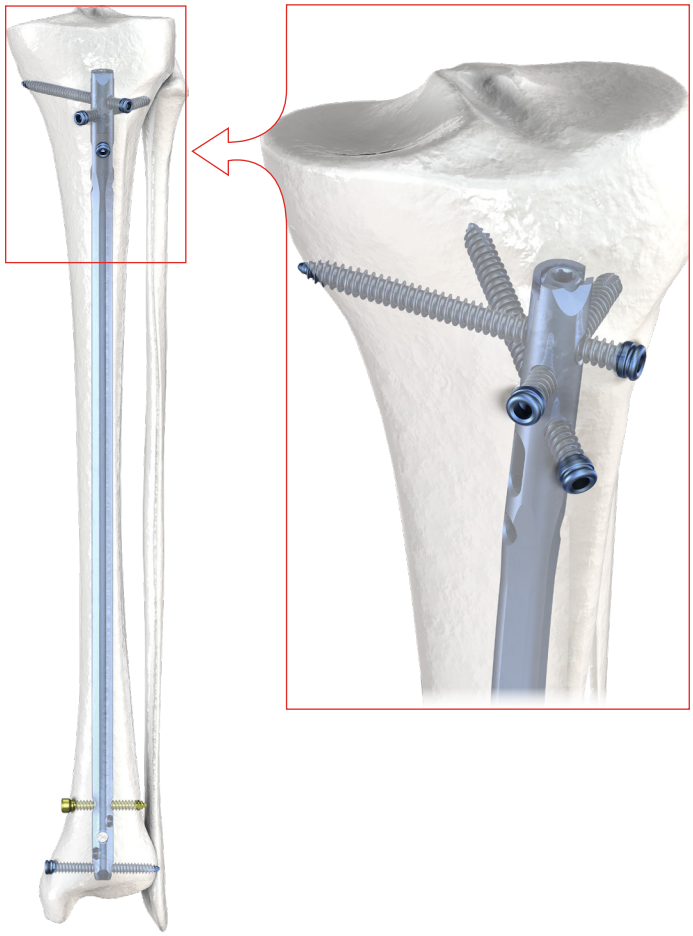

Dynamic stabilization

Dynamic fixation may be used for fractures with good cortical contact of bone fragments in transverse or oblique fractures and for false joints.

In this fixation, two distal holes and one oval-shaped hole in the proximal part of the nail should be used.

Dynamic fixation enables axial movement of bone fragments during limb loading so that physiological stimulus for bone scar formation and its remodeling into lamellar bone may occur.

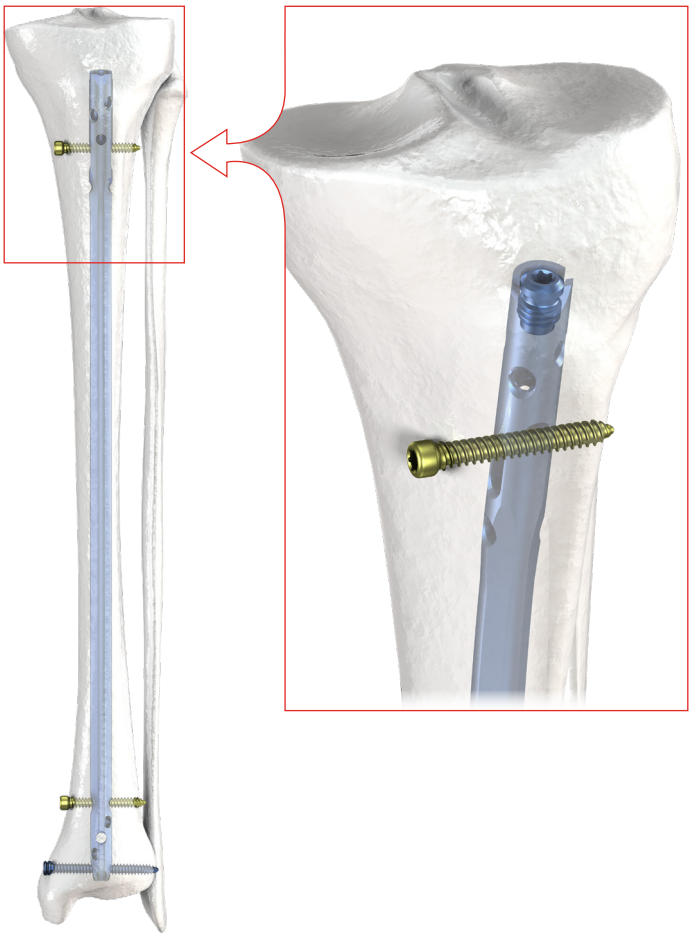

Dynamic stabilization with compression

During dynamic stabilization with compression (*compressive fixation*) a compression screw axially inserted into the internal socket of intramedullary nail shaft is used to put pressure on the nail locking screw.

The compressive fixation eliminates all micromovements in the initial stage of the treatment.

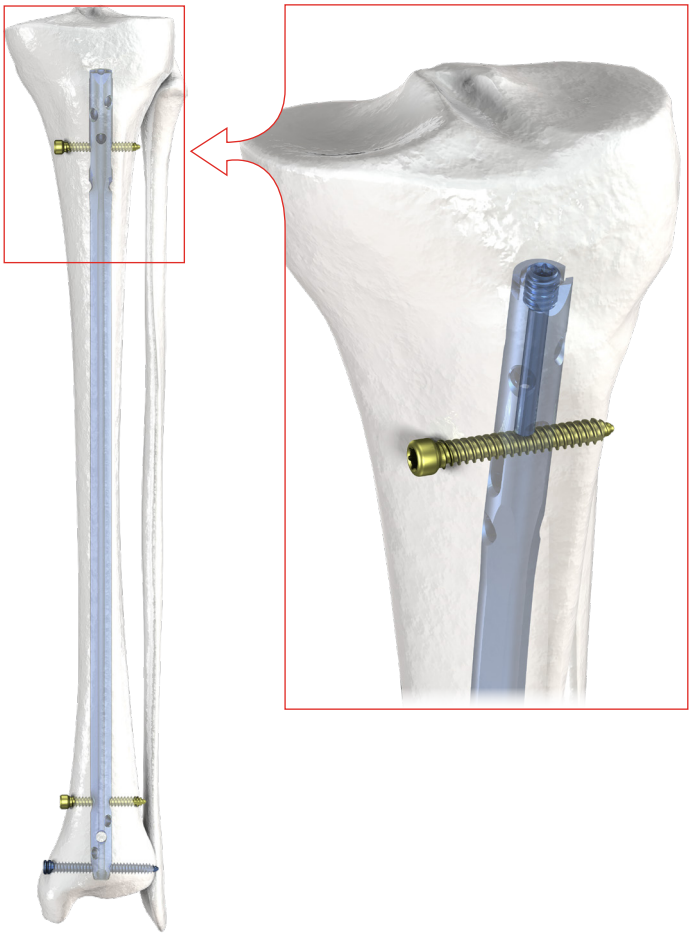

Threaded holes allow for optional locking with the use of:

- **CHARFIX2** distal screw 4.0 or **CHARFIX2** distal screw 5.0

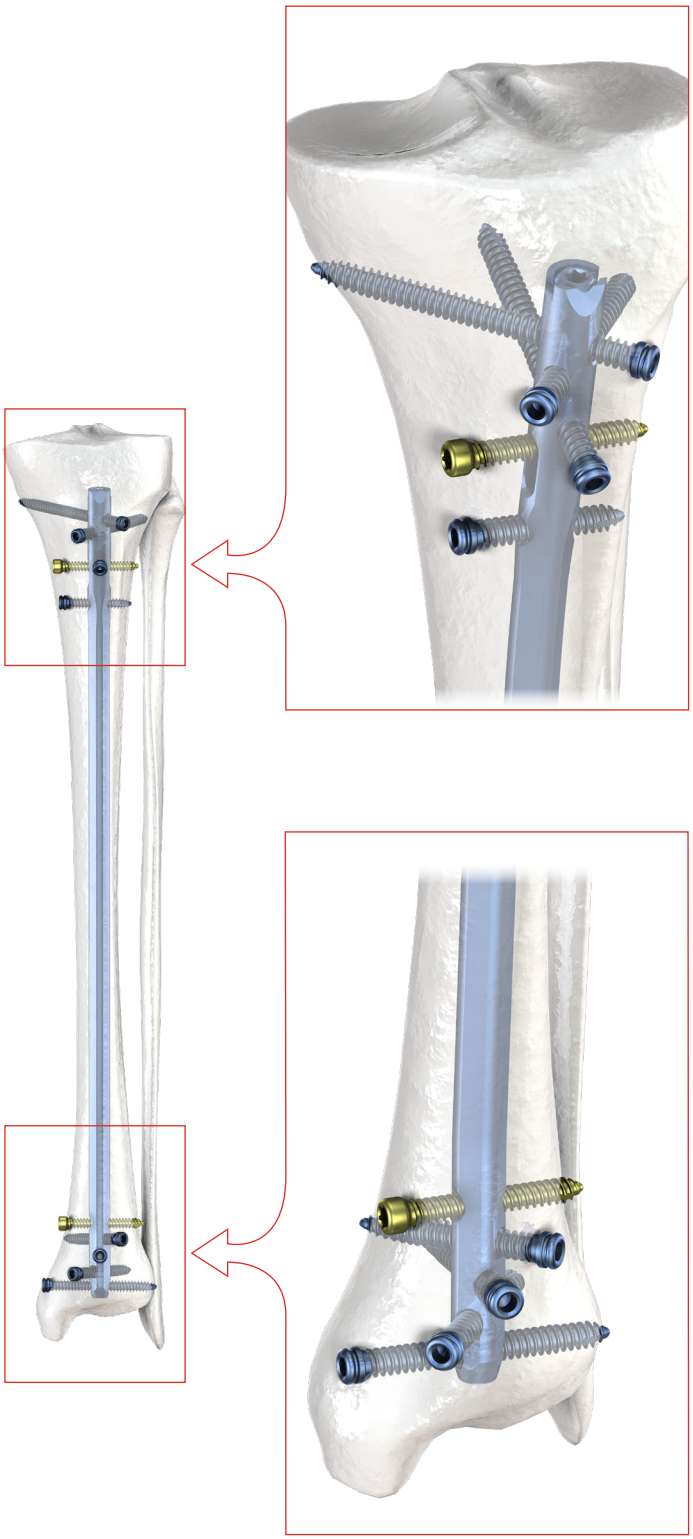

- **CHARFIX2** distal screw 4.5 or **CHARFIX2** distal screw 5.5 prevent angular displacement and movement of the fragments (*when locked in the threaded hole in the nail*).

	Diameter of intramedullary nail			
	Ø8 and Ø9 mm		Ø10 mm and larger	
	Standard locking	Standard locking with angular stabilization	Standard locking	Standard locking with angular stabilization
Round hole	**CHARFIX2** Distal screw 4.0 (*turquoise*)	**CHARFIX2** Distal screw 4.5 (*brown*)	**CHARFIX2** Distal screw 5.0 (*gold*)	**CHARFIX2** Distal screw 5.5 (*blue*)
Oval hole	**CHARFIX2** Distal screw 4.0 (*turquoise*)		**CHARFIX2** Distal screw 5.0 (*gold*)	

CHARFIX2 TIBIAL NAIL

CHARFIX system 2

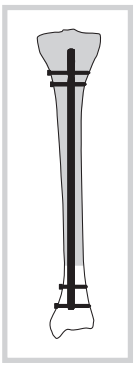

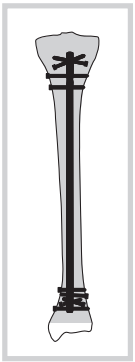

Len	Ti
8	270	3.2651.270
	285	3.2651.285
	300	3.2651.300
	315	3.2651.315
	330	3.2651.330
	345	3.2651.345
	360	3.2651.360
	375	3.2651.375
	390	3.2651.390
9	270	3.2652.270
	285	3.2652.285
	300	3.2652.300
	315	3.2652.315
	330	3.2652.330
	345	3.2652.345
	360	3.2652.360
	375	3.2652.375
	390	3.2652.390
10	270	3.2653.270
	285	3.2653.285
	300	3.2653.300
	315	3.2653.315
	330	3.2653.330
	345	3.2653.345
	360	3.2653.360
	375	3.2653.375
	390	3.2653.390
11	270	3.2654.270
	285	3.2654.285
	300	3.2654.300
	315	3.2654.315
	330	3.2654.330
	345	3.2654.345
	360	3.2654.360
	375	3.2654.375
	390	3.2654.390
12	270	3.2655.270
	285	3.2655.285
	300	3.2655.300
	315	3.2655.315
	330	3.2655.330
	345	3.2655.345
	360	3.2655.360
	375	3.2655.375
	390	3.2655.390

available	Ø	8 mm ÷14 mm	pitch	1 mm
	L	210 mm ÷ 600 mm		5

	Ti					
3.5160.xxx	✓	✓		5.5	30÷90	
3.5159.xxx	✓			5.0	30÷90	
3.5170.xxx	✓	✓		4.5	25÷80	
3.5169.xxx	✓			4.0	25÷80	
3.5162.002	✓					
3.5161.1xx	✓		✓		0÷15	

CHARFIX2 TIBIAL NAIL

CHARFIX system 2

	Len	Ti
8	270	3.2665.270
	285	3.2665.285
	300	3.2665.300
	315	3.2665.315
	330	3.2665.330
	345	3.2665.345
	360	3.2665.360
	375	3.2665.375
	390	3.2665.390
9	270	3.2666.270
	285	3.2666.285
	300	3.2666.300
	315	3.2666.315
	330	3.2666.330
	345	3.2666.345
	360	3.2666.360
	375	3.2666.375
	390	3.2666.390
10	270	3.2667.270
	285	3.2667.285
	300	3.2667.300
	315	3.2667.315
	330	3.2667.330
	345	3.2667.345
	360	3.2667.360
	375	3.2667.375
	390	3.2667.390

available	Ø	8 mm ÷14 mm	pitch	1 mm
	L	210 ÷ 600 mm		5 mm

Use with instrument set [40.5300.500]

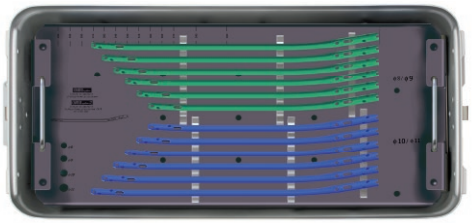

Stand for tibial nails CHARFIX/CHARFIX2 (implants not included) 40.5750.000

ChM sp. z o.o., Lewickie 3b, 16-061 Juchnowiec Kościelny, POLAND, tel. + 48 85 86 86 100, fax + 48 85 86 86 101, chm@chm.eu, www.chm.eu

LOCKING ELEMENTS

Ti | Ster Non Ster

CHARFIX system 2

CHARFIX2 DISTAL SCREW 4.0

25	3.5169.025
30	3.5169.030
35	3.5169.035
40	3.5169.040
45	3.5169.045
50	3.5169.050
55	3.5169.055
60	3.5169.060
65	3.5169.065
70	3.5169.070
75	3.5169.075
80	3.5169.080

25 ÷ 80

CHARFIX2 DISTAL SCREW 4.5

25	3.5170.025
30	3.5170.030
35	3.5170.035
40	3.5170.040
45	3.5170.045
50	3.5170.050
55	3.5170.055
60	3.5170.060
65	3.5170.065
70	3.5170.070
75	3.5170.075
80	3.5170.080

25 ÷ 80

CHARFIX2 DISTAL SCREW 5.0

30	3.5159.030
35	3.5159.035
40	3.5159.040
45	3.5159.045
50	3.5159.050
55	3.5159.055
60	3.5159.060
65	3.5159.065
70	3.5159.070
75	3.5159.075
80	3.5159.080
85	3.5159.085
90	3.5159.090

30 ÷ 90

CHARFIX2 DISTAL SCREW 5.5

30	3.5160.030
35	3.5160.035
40	3.5160.040
45	3.5160.045
50	3.5160.050
55	3.5160.055
60	3.5160.060
65	3.5160.065
70	3.5160.070
75	3.5160.075
80	3.5160.080
85	3.5160.085
90	3.5160.090

30 ÷ 90

CHARFIX2 END CAP M8

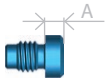

A	
0	3.5161.100
+5	3.5161.105
+10	3.5161.110
+15	3.5161.115

CHARFIX2 COMPRESSION SCREW M8X1.25

	3.5162.002

Stand for CHARFIX2 nail locking elements (set with a box without implants) 40.5058.200

INSTRUMENT SET FOR TIBIAL NAILS **15.0424.102**

Instrument set [**15.0424.102**] is used for fracture stabilization of the tibial shaft, and removal of the implants after the treatment period.
The set includes:

15.0424.102	Name	Pcs	Catalogue No.
	Targeter arm	1	**40.6573.000**
	Targeter D	1	**40.5302.200**
	Targeter B	1	**40.8539.000**
	Reconstruction targeter	1	**40.6572.000**
	Lateral targeter	1	**40.6571.000**
	Wrench S8	1	**40.5304.200**
	Connecting screw M8x1.25 L-30	1	**40.5306.100**
	Compression screw M5	1	**40.5313.100**
	Impactor-extractor	1	**40.5308.100**
	Connector M8x1.25/M14	1	**40.5309.100**
	Mallet	1	**40.3667.000**

ChM sp. z o.o., Lewickie 3b, 16-061 Juchnowiec Kościelny, POLAND, tel. + 48 85 86 86 100, fax + 48 85 86 86 101, chm@chm.eu, www.chm.eu

INSTRUMENT SET FOR TIBIAL NAILS **15.0424.102**

CHARFIX system 2

15.0424.102	Name	Pcs	Catalogue No.
	Set block 9/5.0	2	**40.5509.200**
	Protective guide 9/7	2	**40.5510.300**
	Drill guide 7/3.5	2	**40.5511.300**
	Trocar 6.5	1	**40.5534.200**
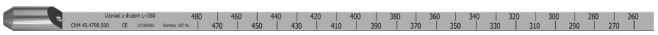	Nail length measure	1	**40.4798.500**
	Guide rod handle	1	**40.1351.100**
	Drill with scale 3.5/150	1	**40.5343.002**
	Protective guide short	1	**40.5871.100**
	Drill guide short 7/3.5	1	**40.5872.100**
	Trocar short 7	1	**40.1354.200**
	Aiming insert 9.0	2	**40.5065.009**
	Guide rod 3.0/580	1	**40.3925.580**
	Screwdriver T25	1	**40.5575.400**
	Drill with scale 3.5/350	2	**40.5339.002**
	Screw length measure	1	**40.5530.400**
	Hole depth measure	1	**40.2665.100**
	Curved awl 8.0	1	**40.5523.100**
	Cannulated drill 12/3.0	1	**40.5314.100**
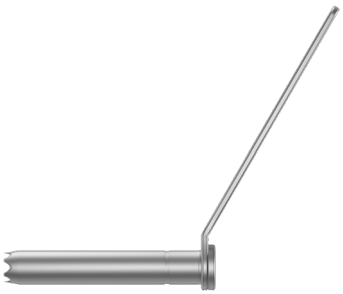	Protective guide	1	**40.5315.200**

15.0424.102	Name	Pcs	Catalogue No.
	Guide rod 3.2/385	4	**40.6316.000**
	Protective guide 12.5/3.0	1	**40.6518.000**
	Perforated aluminum lid 1/1 595x275x15mm Gray	1	**12.0750.200**
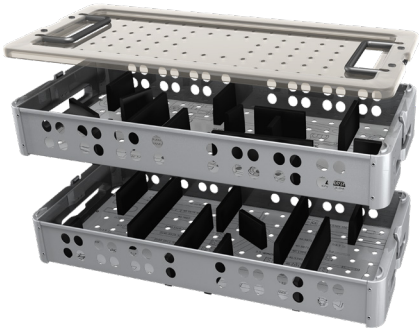	Stand for tibial nails	1	**14.0424.102**
	Container with solid bottom 1/1 595x275x185mm	1	**12.0750.103**

Additionally, for the surgery, the following instruments are necessary:

- electric drive,
- a set of flexible intramedullary reamers with a diameter of 8.0 ÷ 13.0mm with a guide and a handle,
- a set of awls standard and cannulated),
- a set of surgical drills,
- Kirschner nails,
- hammers,
- and other.

ChM sp. z o.o., Lewickie 3b, 16-061 Juchnowiec Kościelny, POLAND, tel. + 48 85 86 86 100, fax + 48 85 86 86 101, chm@chm.eu, www.chm.eu

II. SURGICAL TECHNIQUE

II.1. INTRODUCTION

Each surgical procedure must be carefully planned.
Before starting the procedure, X-Ray imaging of the tibial fracture in AP and lateral position shall be performed, in order to define type of fracture and the size of intramedullary nail (*length, diameter*) that should be used for implantation. To determine the length of the nail, the fibula length measurement is often helpful. The operation shall be performed on the operating table equipped with traction and C-arm device. When patient is placed supine, the operated limb should be bent in hip joint by an angle of 70-90°, abducted by an angle of 10-20° and bent by an angle of 80-90° in knee joint; the ankle joint should stay in neutral position (*foot perpendicular to tibia*).

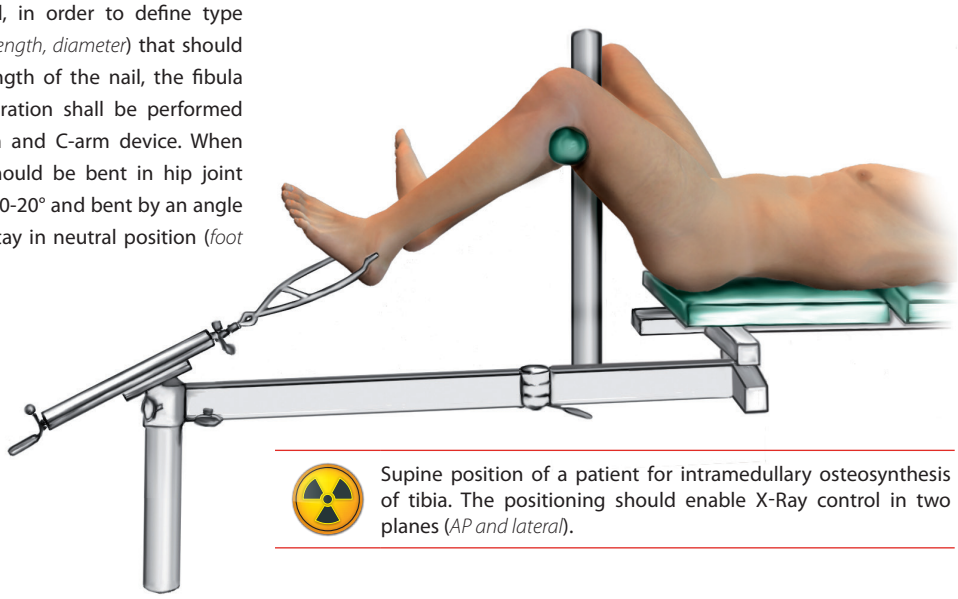

Supine position of a patient for intramedullary osteosynthesis of tibia. The positioning should enable X-Ray control in two planes (*AP and lateral*).

Surgical approach should be prepared by:

- longitudinal skin incision from the lower pole of patella to the point placed medially from tuberosity of tibia,
- incision along medial edge of patella tendon and its lateral retraction.

Insertion point is placed on extension of the line proceeding in the middle of medullary canal (*X-Ray in AP position*) and is also located on the edge of tibial tuberosity and its front edge of epiphysis.

Intramedullary canal should be 1.5-2.0mm wider than the diameter of the nail.

In case of reaming, medullary canal should be 1.5-2.0mm wider than the diameter of the nail. The proximal part of medullary canal should be reamed in depth of 5cm and for width of 12mm diameter.

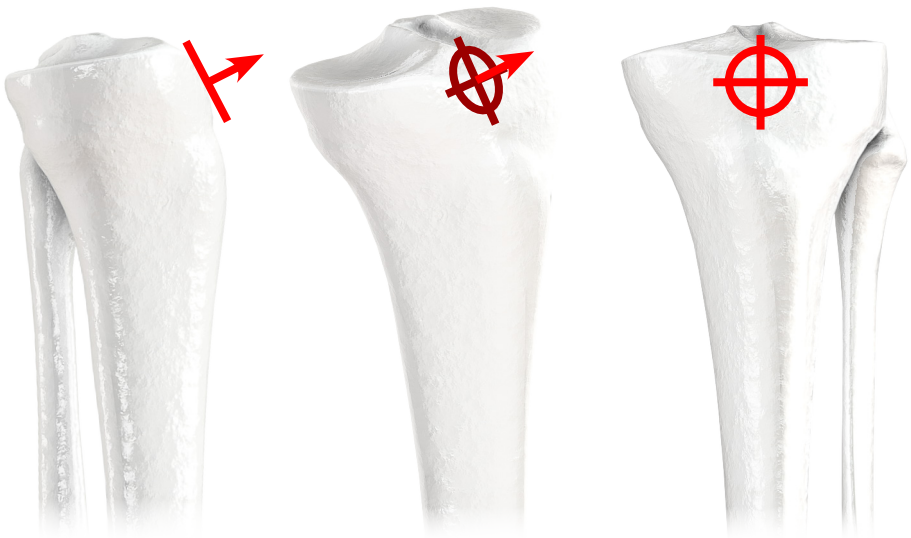

The above description is not detailed instruction of conduct. The surgeon decides about choosing the operating procedure.

II.2. OPENING THE MEDULLARY CANAL

1 Insert the protective guide 12.5/3.0 [**40.6518**] into protective guide [**40.5315.200**] and then into the performed incision so that the end of the guide 12.5/3.0 is placed as close to the bone as possible.

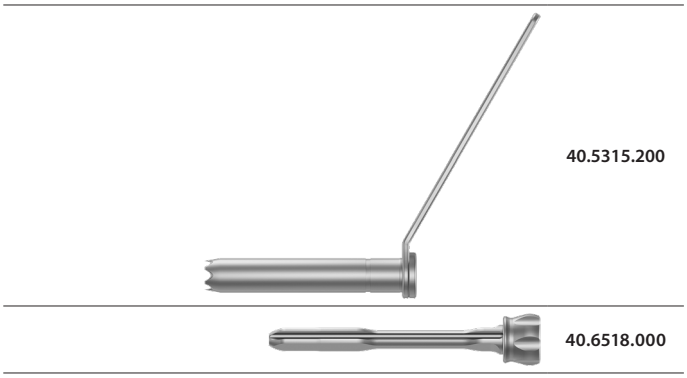

2 Install the guide rod 3.2/385 [**40.6316**] to the drive and insert, through the central hole of the guide 12.5/3.0 [**40.6518**], into the medullary canal of the tibia.

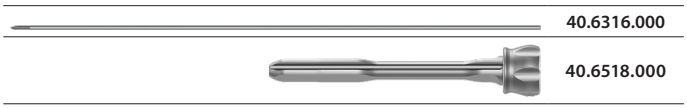

The above description is not detailed instruction of conduct. The surgeon decides about choosing the operating procedure.

3 Should the guide rod be insertion incorrectly, re-position it.

Position the protective guide 12.5/3.0 [**40.6518**] so that the side hole is directed as intended.
Insert the other guide rod 3.2/385 [**40.6316**] through the side hole of the guide 12.5/3.0

The rod has been corrected by 4mm.

Remove the protective guide, protective guide 12.5/3.0 and one guide rod when correction was performed.

40.6518.000

40.6316.000

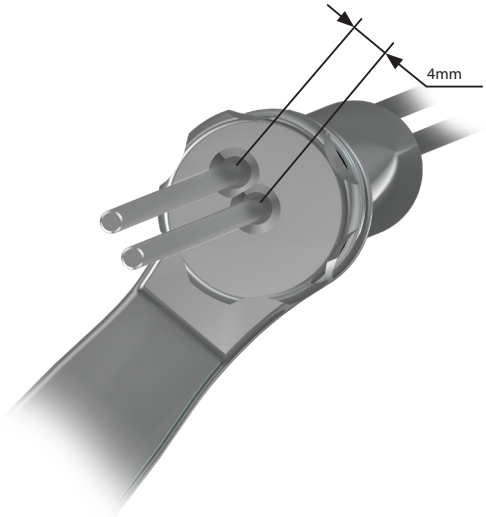

4 Use the guide rod 3.2/385 [**40.6316**] to insert the curved awl 8.0 to a depth at which the awl blade is positioned along the medullary canal, ensuring proper insertion of the guide rod 3.0/580 [**40.3925.580**].

Having opened the canal, remove the guide rod 3.2/385.

40.6316.000

40.5523.100

40.3925.580

The above description is not detailed instruction of conduct. The surgeon decides about choosing the operating procedure.

5 Mount the guide rod handle [**40.1351.100**] onto the guide rod 3.0/580 [**40.3925.580**]. Advance both via the curved awl 8.0 [**40.5523.100**] into the medullary canal to the depth required for the fragments to be reduced.

While inserting the rod, reduce the fracture and make sure the rod passes through all the fragments.

Remove the guide rod handle from the rod and curved awl 8.0 from the canal.

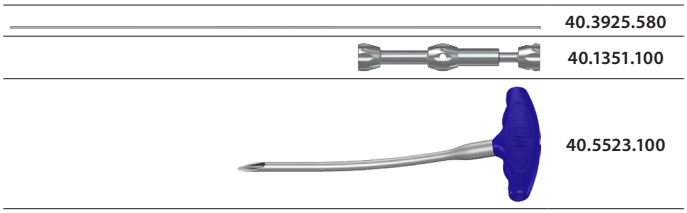

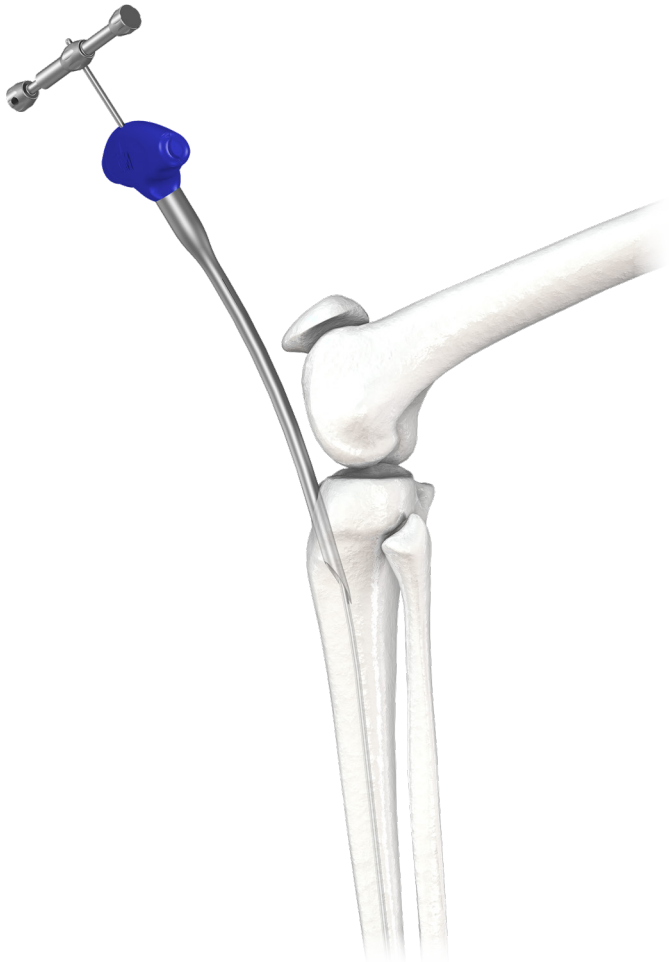

6 Use cannulated drill 12/3.0 [**40.5314.100**], protective guide [**40.5315.200**] and already introduced guide rod 3.0/580 [**40.3925.580**] to open the medullary cavity.

Ream the medullary canal with the drill until the drill collar leans against the protective guide.

Remove the drill and protective guide.

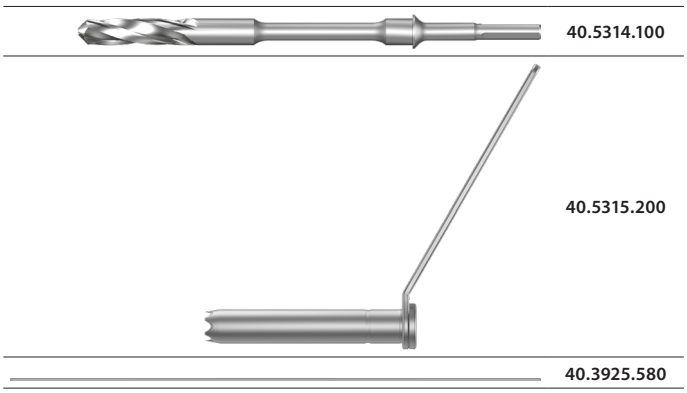

The above description is not detailed instruction of conduct. The surgeon decides about choosing the operating procedure.

II.3. PREPARATION OF MEDULLARY CANAL FOR NAIL INSERTION

II.3.1. OPTION I: Reamed canal

7 Gradually widen the medullary cavity with flexible reamers, with steps of 0.5mm, until the diameter of the canal is 1.5 - 2mm wider than the diameter of the nail, at a depth at least equal to the nail length.

Remove the flexible reamer.
Leave the guide rod 3.0/580 [**40.3925.580**] in the medullary canal.

	40.3925.580

II.3.2. OPTION II: Unreamed canal

8 Widen the proximal part of the medullary canal with reamers to a depth of 5cm. For nails with the diameter of 11mm or larger - to the diameter 1.5-2.0 mm greater than the diameter of the nail.

Remove the flexible reamer.
Leave the guide rod 3.0/580 [**40.3925.580**] in the medullary canal.

	40.3925.580

The above description is not detailed instruction of conduct. The surgeon decides about choosing the operating procedure.

9 Insert the nail length measure [**40.4798.500**] via the guide rod until its tip rests on the bone. Read the length on the nail measure scale.

Remove the measure from the guide rod. Should the solid nail be used, remove the guide rod from the medullary canal.

The medullary canal has been prepared for nail insertion.

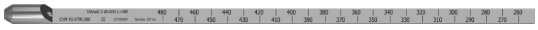

40.4798.500

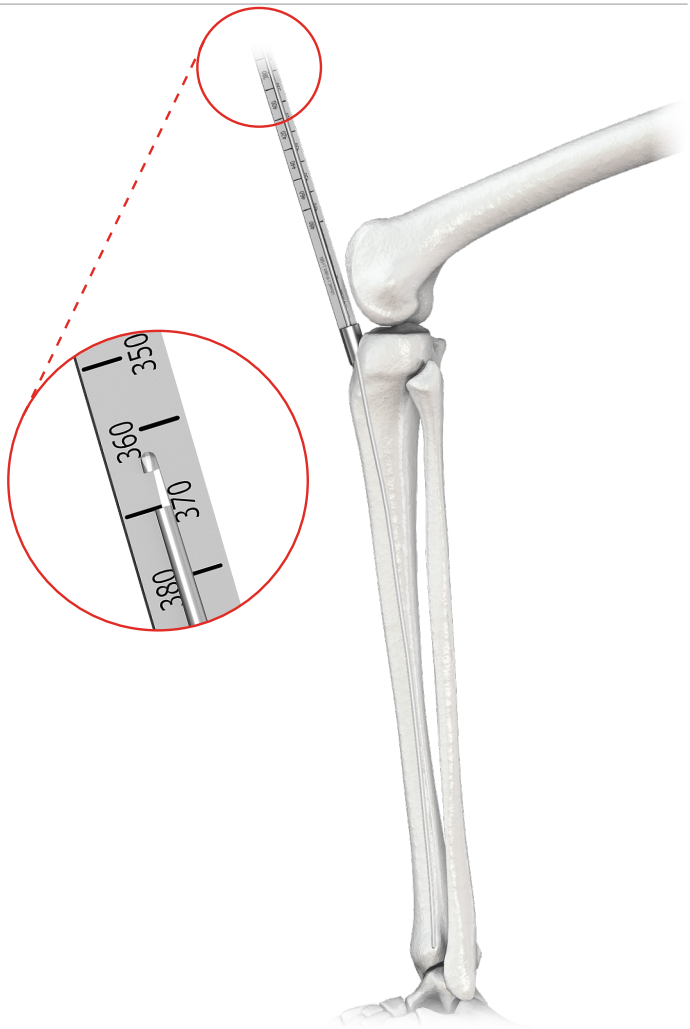

The above description is not detailed instruction of conduct. The surgeon decides about choosing the operating procedure.

II.4. NAIL INSERTION

10 Prior to nail insertion, the slider of the targeter D [**40.5302.200**] should be set in relation to the distal holes of the nail.

Attach lateral targeter [**40.6571**] to the targeter arm [**40.6573**] and then attach the targeter D [**40.5302.200**]. Depending on the treated limb, the set of targeters may be on the left or right of this limb.

The way the targeters are installed and the position of the slider of the targeter D is determined, depends on the treated limb (*left or right*). It is recommended to position the targeter D so that its proximal part is directed at an operator and the distal, bent part is directed upwards.

40.5302.200

40.6573.000

40.6571.000

configuration for left limb

configuration for right limb

Right limb:

- install the lateral targeter to the targeter arm so that the connective part to the targeter D is located from the left limb side.
- the slider of the targeter D in distal part should be set so that its fixing and mounting elements are located from the left limb side.

Left limb:

- install the lateral targeter to the targeter arm so that the connective part to the targeter D is located from the right limb side.
- the slider of the targeter D in distal part should be set so that its fixing and mounting elements are located from the right limb side.

11 Installation of the nail to the targeter arm.

Use the connecting screw M8x1.25 L-30 [**40.5306.100**] and wrench S8 [**40.5304.200**] to attach the nail to the targeter arm [**40.6573**].


40.5306.100


40.6573.000


40.5304.200

12 Position of the targeter D in relation to the nail.

When the nail is correctly attached to the targeter arm, the directions of deflection of distal parts of the nail and targeter D [**40.5302.200**] are the same.

Use screwdriver T25 [**40.5575.400**] to set the slider of the targeter D in the middle of the slider plate. Use two set blocks 9/5.0 [**40.5509.200**] to position the slider in line with distal locking holes of the nail. Lock the slider using the screwdriver. When the slider is properly set and locked, the set blocks should enter the nail holes smoothly.

Remove the set blocks from the slider.
Detach the targeter D [**40.5302.200**] and lateral targeter [**40.6571**] from the targeter arm [**40.6573**].


40.5302.200


40.5575.400


40.5509.200


40.6571.000


40.6573.000

The above description is not detailed instruction of conduct. The surgeon decides about choosing the operating procedure.

13 Attach the impactor-extractor [**40.5308.100**] to the targeter arm [**40.6573**].

40.5308.100

40.6573.000

14 Use mallet [**40.3667**] to insert the nail into intramedullary canal at an appropriate depth.

Cannulated nail should be inserted into the canal via the guide rod 3.0/580 [**40.3925.580**].
Solid nail should be inserted directly into the canal (*without the use of the guide rod*).

Detach the impactor-extractor from the targeter arm.
Remove the guide rod (*should a cannulated nail be used*).

40.3667.000

40.3925.580

II.5. DISTAL LOCKING OF THE NAIL

It is possible to lock the nail in its distal part maximally on four levels. Targeter D **[40.5302.200]** uses one round and one oval hole, which are located laterally.

40.5302.200

	Diameter of intramedullary nail			
	Ø8 and Ø9 mm		**Ø10 mm and larger**	
	Standard locking	Standard locking with angular stabilization	Standard locking	Standard locking with angular stabilization
Round hole	**CHARFIX2** Distal screw 4.0 (*turquoise*)	**CHARFIX2** Distal screw 4.5 (*brown*)	**CHARFIX2** Distal screw 5.0 (*gold*)	**CHARFIX2** Distal screw 5.5 (*blue*)
				
Oval hole	**CHARFIX2** Distal screw 4.0 (*turquoise*)		**CHARFIX2** Distal screw 5.0 (*gold*)	
				

Depending on the stabilization method, it is possible to insert the distal screws into the nail oval-shaped hole:

a) static method

15 Introduce the instruments into the proximal part of the dual hole of the slider.

b) dynamic method with compression

16 Introduce the instruments into the distal part of the dual hole of the slider.

II.5.1. OPTION I: Under X-Ray control

17 Use image intensifier to verify the mutual position of holes in the targeter slider and in the distal part of the intramedullary nail.

Mount the targeter D **[40.5302.200]** and lateral targeter **[40.6571]** to the targeter arm **[40.6573]**. Position the image intensifier in such a way that the image displayed shows a round hole of the nail (*proximal or distal*). Insert the protective guide 9/7 **[40.5510.300]** and drill guide 7/3.5 **[40.5511.300]** into the appropriate hole of the targeter slider - the tip of the drill guide should rest on bone. Use image intensifier to verify the mutual position of holes in the drill guide and the nail. The holes in the nail and drill guide must coincide - the display should show a circle (*shape similar to circle is acceptable*). The targeter position should be corrected if the shape on display differs from the circle. Use screwdriver T25 **[40.5575.400]** to shift the targeter slider (*by rotating the screw left or right*) until the shape on display is a circle (*shape similar to circle is acceptable*).

40.5302.200

40.5510.300

40.5511.300

40.5575.400

The above description is not detailed instruction of conduct. The surgeon decides about choosing the operating procedure.

18 Remove the drill guide from the protective guide. Insert the the trocar 6.5 [**40.5534.200**]. Mark the entry point for the locking screws, then perform incision through the soft tissues along the marked point. Reach the cortical layer of bone with the trocar and mark the entry point for the drill. Simultaneously, advance the protective guide until it reaches the bone. Remove the trocar.

	**40.5510.300**
	**40.5534.200**

19 Insert the drill guide 7/3.5 [**40.5511.300**] into the left protective guide 9/7 [**40.5510.300**].

Use an electric drive and a drill with scale 3.5/350 [**40.5339.002**], led via the drill guide, to drill an opening in the tibia that goes through its both cortical layers and the nail hole. The scale on the drill indicates the length of the locking element.

Drill under X-Ray control.

Remove the drive. Leave the drill in the hole.

	**40.5510.300**
	**40.5511.300**
	40.5339.002

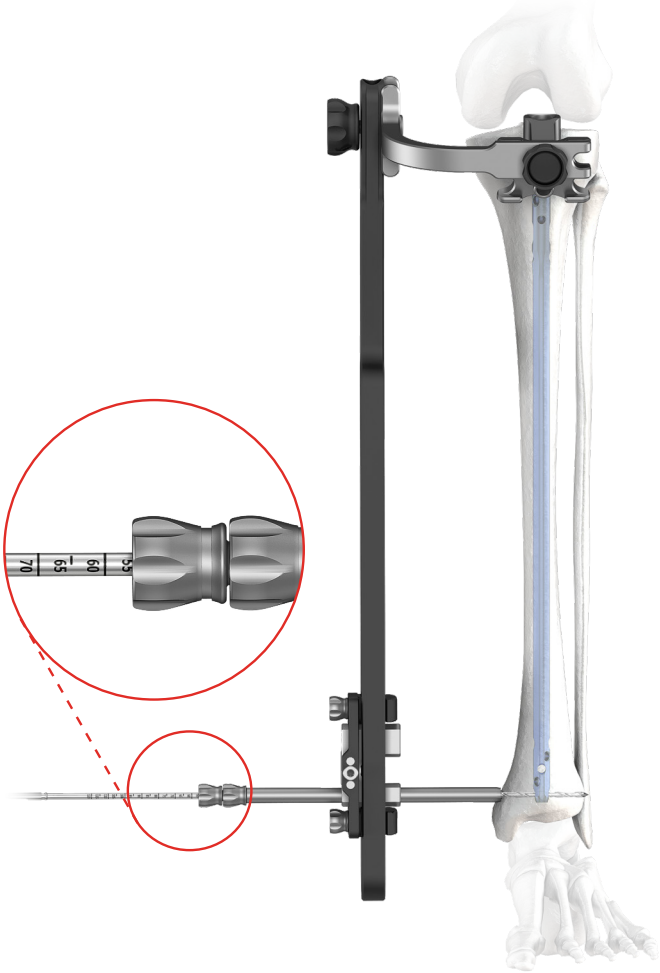

20 Insert the protective guide 9/7 [**40.5510.300**] with trocar 6.5 [**40.5534.200**] into the other hole of the slider of the targeter D [**40.5302.200**]. Advance both into the incision until they reach the cortex of the bone.
Remove the trocar.

	**40.5302.200**
	**40.5510.300**
	**40.5534.200**

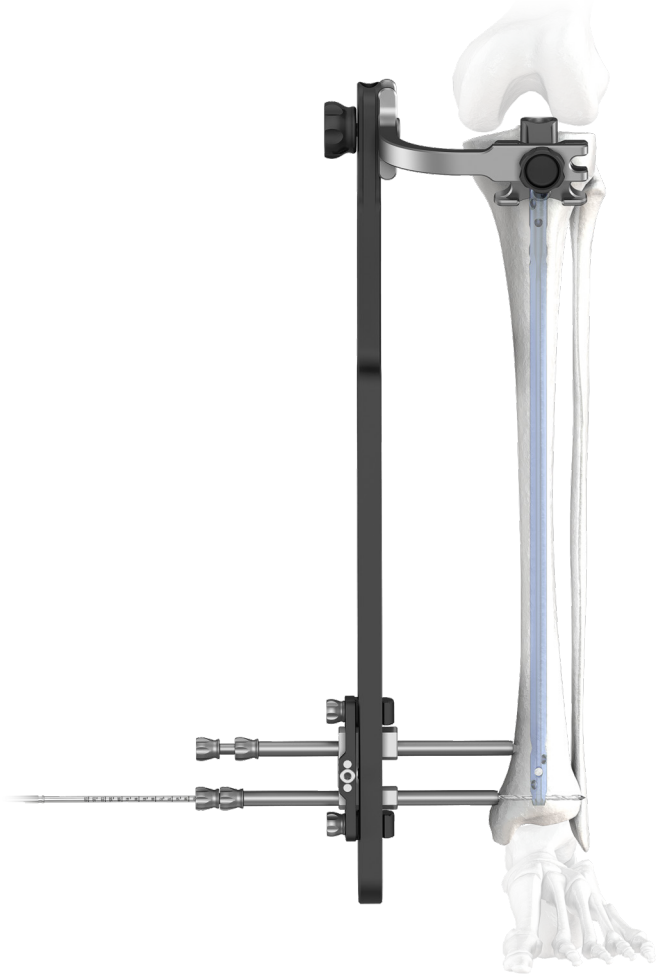

21 Insert the drill guide 7/3.5 [**40.5511.300**] into the protective guide 9/7 [**40.5510.300**].
Use the electric drive and the drill with scale 3.5/350 [**40.5339.002**], to drill an opening in the tibia that goes through its both cortical layers and the nail hole. The scale on the drill indicates the length of the locking element.

Drill under X-Ray control.

Remove the drill and drill guide from the proximal hole.
Leave the protective guide in the slider.

	**40.5510.300**
	**40.5511.300**
	40.5339.002

The above description is not detailed instruction of conduct. The surgeon decides about choosing the operating procedure.

22 Insert the screw length measure **[40.5530.400]** through the protective guide 9/7 **[40.5510.300]** into the drilled hole until its hook reaches the "*exit*" plane of the hole. Read the length of the locking screw on the B-D scale.
During the measurement, the tip of the protective guide should rest on the bone.

Remove the screw length measure.
Leave the protective guide in the slider.

	**40.5510.300**
	**40.5530.400**

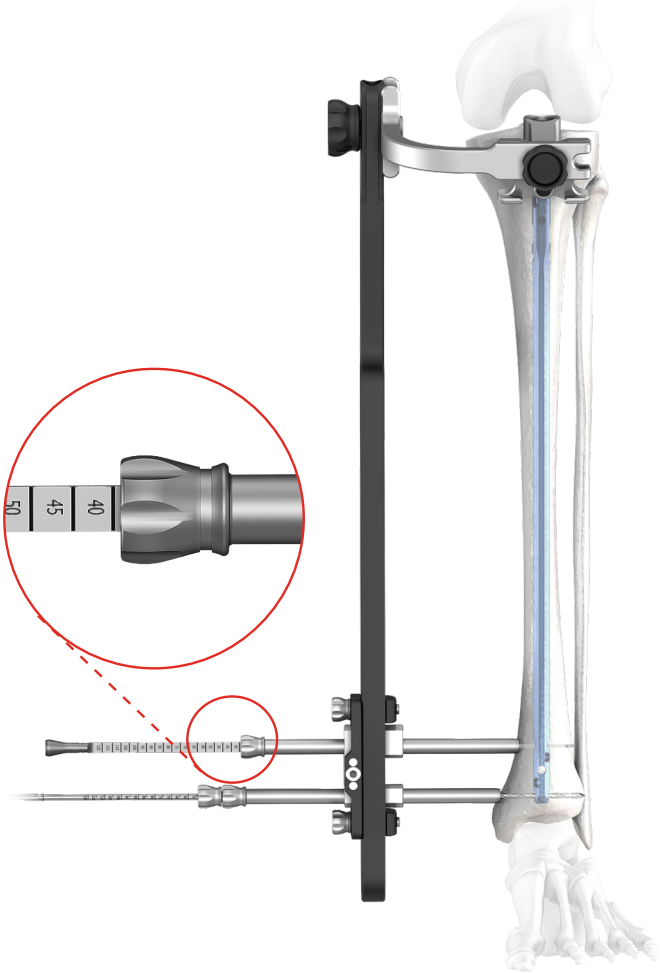

23 Insert the tip of the screwdriver T25 **[40.5575.400]** into the socket of a locking screw. Then insert them into the protective guide 9/7 **[40.5510.300]** and insert the locking screw into the drilled hole until the screw head reaches the bone (*the groove on the screwdriver shaft should match the edge of protective guide*).

	**40.5575.400**
	**40.5510.300**

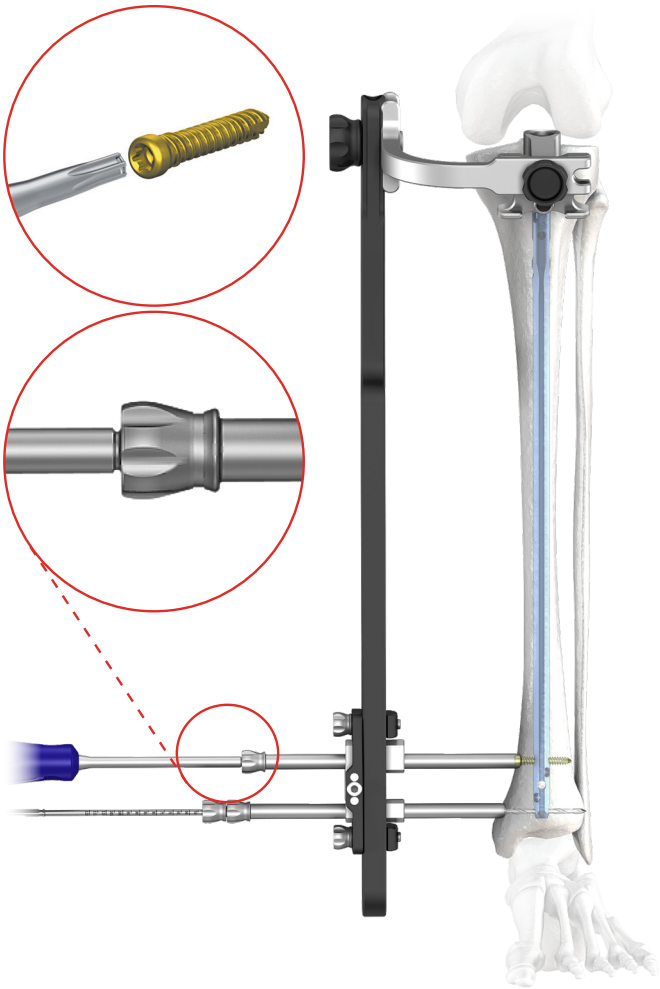

24 Remove the drill with scale 3.5/350 **[40.5339.002]** and drill guide 7/3.5 **[40.5511.300]** from the distal hole in the slider. Leave the protective guide 9/7 **[40.5510.300]** in the slider. Insert the screw length measure **[40.5530.400]** through the protective guide into the drilled hole until the end of measure reaches the "*exit*" of the hole. Read the length of a locking screw on the B-D scale. During the measurement, the tip of protective guide should rest on the bone.

Remove the screw length measure.
Leave the protective guide in the slider.

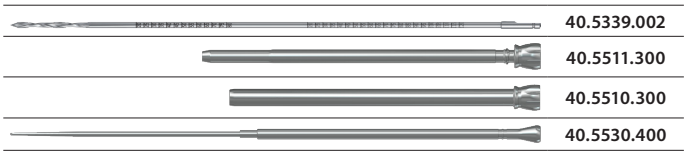

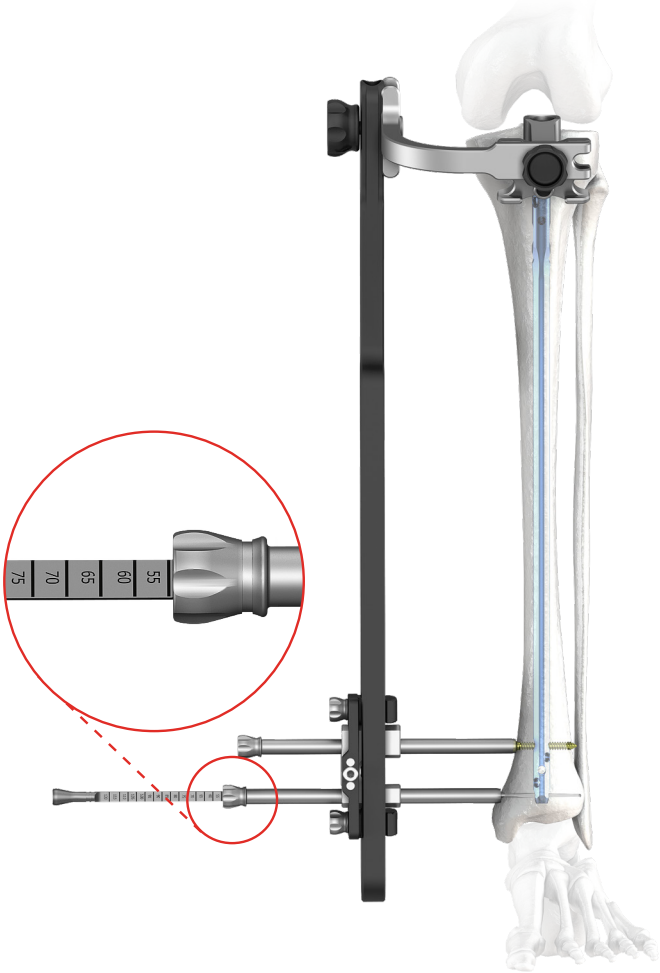

25 Insert the tip of the screwdriver T25 **[40.5575.400]** into the socket of a locking screw. Then insert them into the protective guide 9/7 **[40.5510.300]** and insert the locking screw into the drilled hole until the screw head reaches the bone (*the groove on the screwdriver shaft should match the edge of protective guide*).

Remove the screwdriver and protective guides.
Remove the targeter D **[40.5302.200]**.

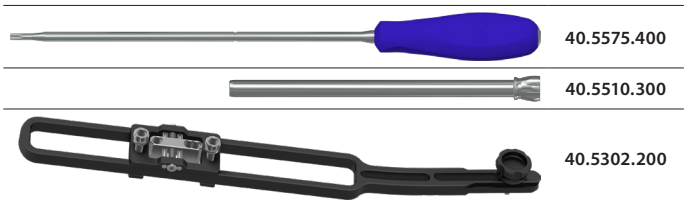

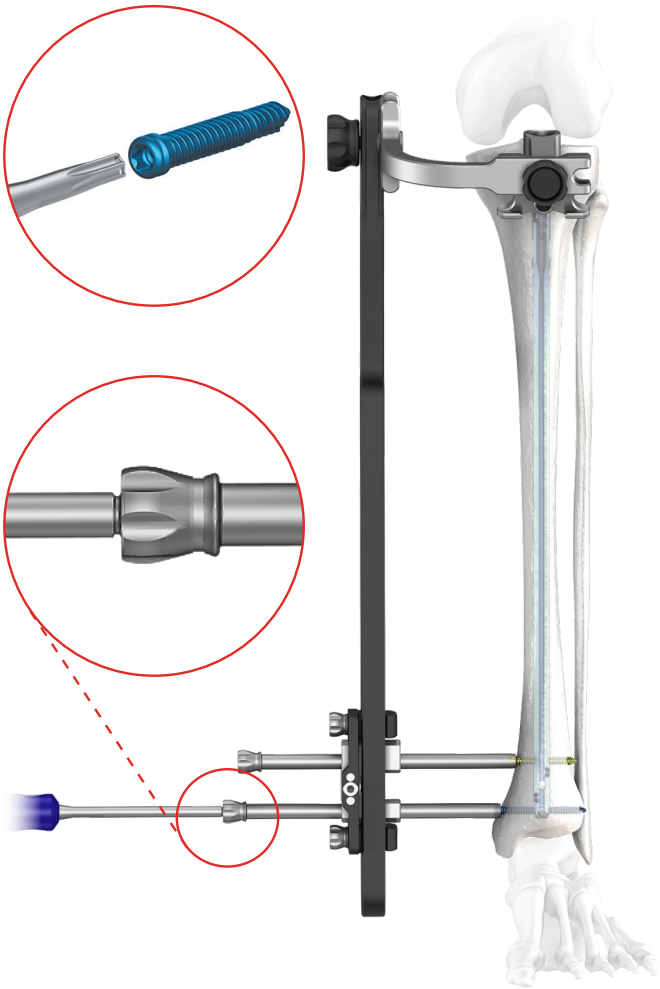

The above description is not detailed instruction of conduct. The surgeon decides about choosing the operating procedure.

II.5.2. OPTION II: Without X-Ray control

determine the location of the nail holes by adjusting the position of targeter D slider.

26 Mount the lateral targeter [**40.6571**] to the targeter arm [**40.6573**] and then the targeter D [**40.5302.200**].

40.6571.000

40.6573.000

40.5302.200

27 Insert the protective guide 9/7 [**40.5510.300**] and trocar 6.5 [**40.5534.200**] into one of the slider holes (*distal hole is preferred*).
Mark the entry point on the skin for the locking screws and make the incision of soft tissues that include this point. Then advance the protective guide and trocar until they reach the cortical layer of bone and mark the entry point for the drill.
Remove the trocar.

40.5510.300

40.5534.200

28 Insert the drill guide 7/3.5 [**40.5511.300**] into the protective guide 9/7 [**40.5510.300**].

Use the electric drive and the drill with scale 3.5/350 [**40.5339.002**], to drill an opening in the tibia that goes through its both cortical layers and the nail hole.

	**40.5510.300**
	**40.5511.300**
	40.5339.002

29 Correct placement of the drill in the hole of the nail may be verified by the guide rod 3.0/580 [**40.3925.580**], which is inserted into the connecting screw M8 [**40.5306.100**] and the cannulation of the nail. The drill inside the nail hole creates resistance for the rod.

	40.3925.580
	**40.5306.100**

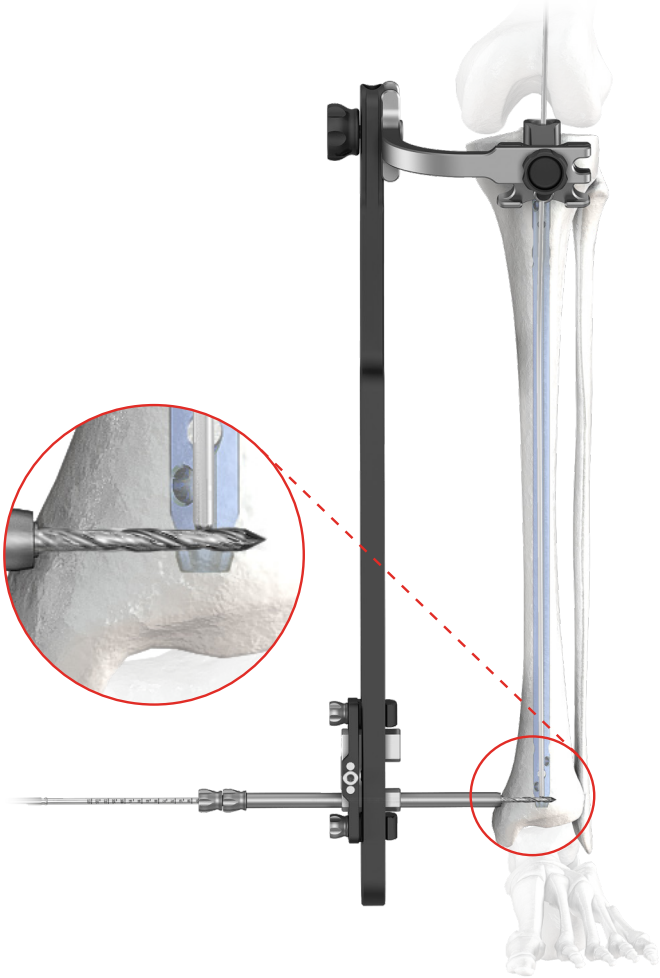

The above description is not detailed instruction of conduct. The surgeon decides about choosing the operating procedure.

30 If the drill went through the first cortical layer but missed the hole, then:

- back the drill to enable slider movement,
- rotate the regulation screw of the slider in desired direction by four full turns.

Clockwise turn of the screw moves the slider *„up"*, *counter-clockwise - moves the slider „down"*.

If the drill went through the nail hole, drill through the other layer of the cortical bone.

After disconnecting the drive, leave the drill in the hole.

Scale on the drill determines the length of the locking element.

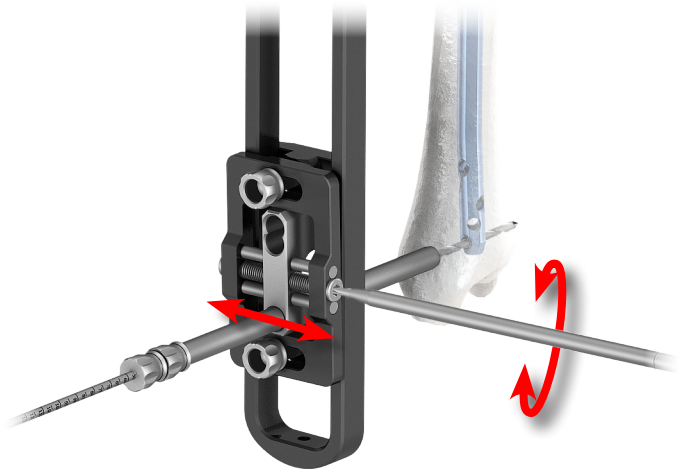

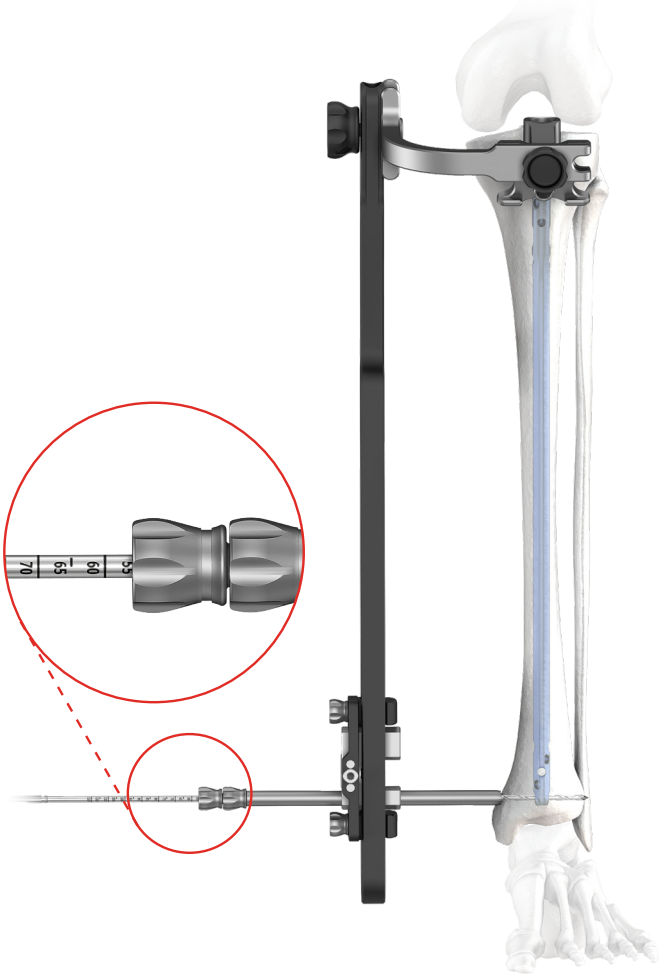

31 Insert the protective guide 9/7 **[40.5510.300]** with trocar 6.5 **[40.5534.200]** into the other (*proximal*) hole of the slider of the targeter D **[40.5302.200]**. Advance the protective guide and trocar into the incision until they rest on the cortical bone. Use the trocar to mark the entry point for the drill.

Remove the trocar.

Leave the protective guide in the slider.

	**40.5302.200**
	**40.5510.300**
	**40.5534.200**

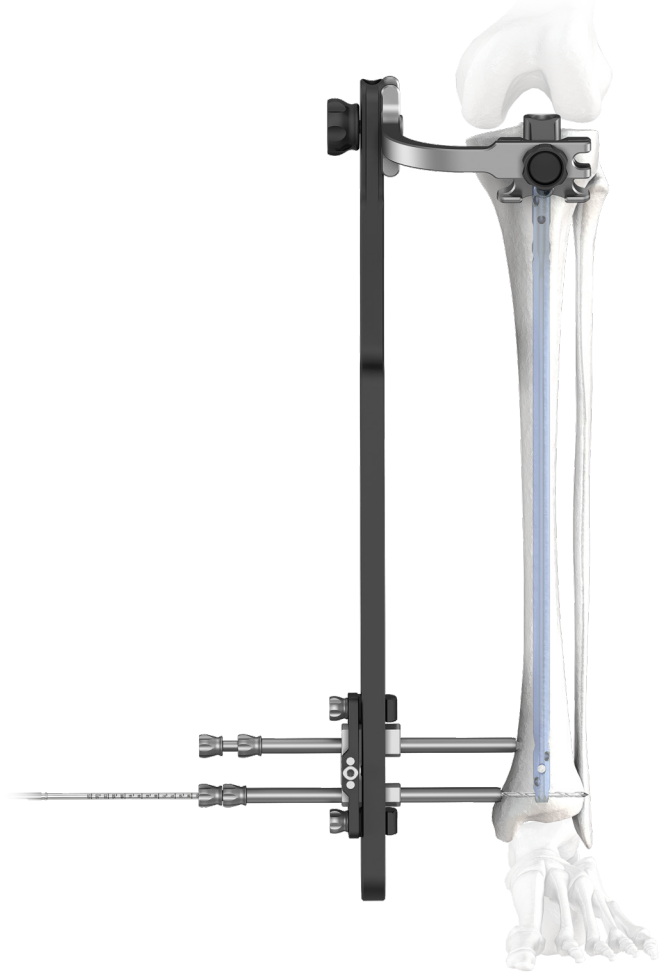

32 Insert the drill guide 7/3.5 **[40.5511.300]** into the protective guide 9/7 **[40.5510.300]** until the drill guide rests on the bone. Use the electric drive and drill with scale 3.5/350 **[40.5339.002]** to drill an opening in the tibia that goes through its first cortical layer and the nail hole.

If the drill missed the nail hole, then use the other hole in the targeter slider to find the hole.

Use the guide rod to check whether the drill is actually located in the nail hole (*tip of the rod leans against the surface of the drill*).

If the drill went through the nail hole, then drill through the other cortical layer of the bone. The scale on the drill indicates the locking element length.

Remove the drill and drill guide.
Leave protective guide in place.

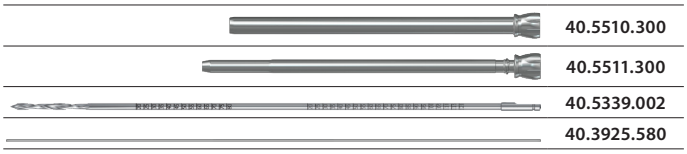

33 Insert the screw length measure **[40.5530.400]** through the protective guide 9/7 **[40.5510.300]** into the drilled hole until the end of measure reaches the "*exit*" of the hole. Read the length of the locking screw on the B-D scale.
During the measurement, the tip of protective guide should rest on the cortical layer of bone.

Remove the screw length measure.
Leave the protective guide in the slider.

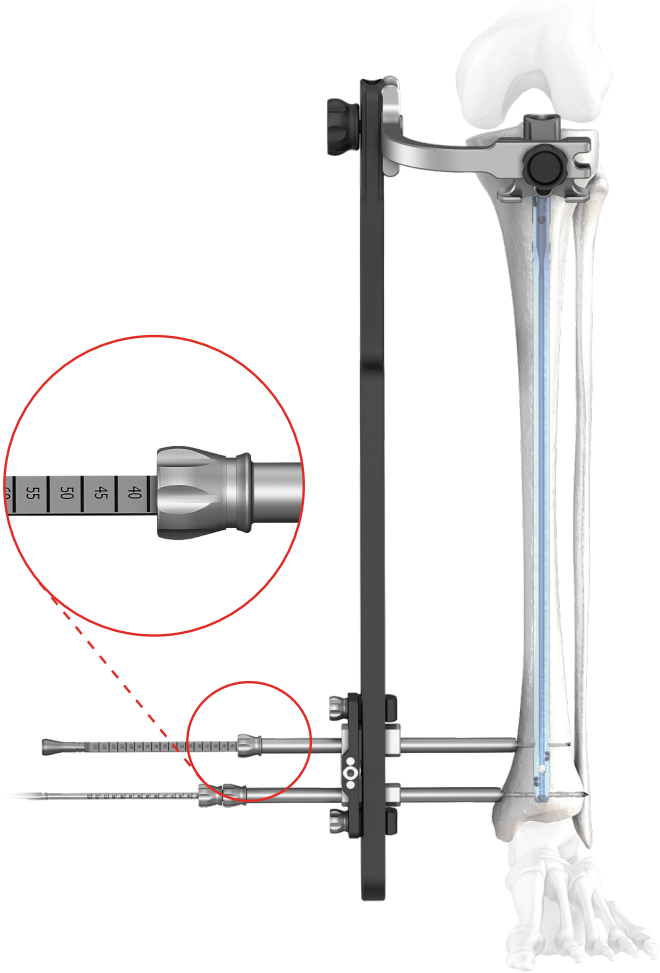

The above description is not detailed instruction of conduct. The surgeon decides about choosing the operating procedure.

34 Insert the tip of the screwdriver T25 **[40.5575.400]** into the socket of the selected locking screw. Then advance them both into the protective guide 9/7 **[40.5510.300]** and insert the locking screw into the prepared hole in the bone until the head of screw reaches the cortex bone (*the groove on the screwdriver shaft should match the edge of protective guide*).

Remove the screwdriver.
Leave the protective guide in place.

40.5575.400

40.5510.300

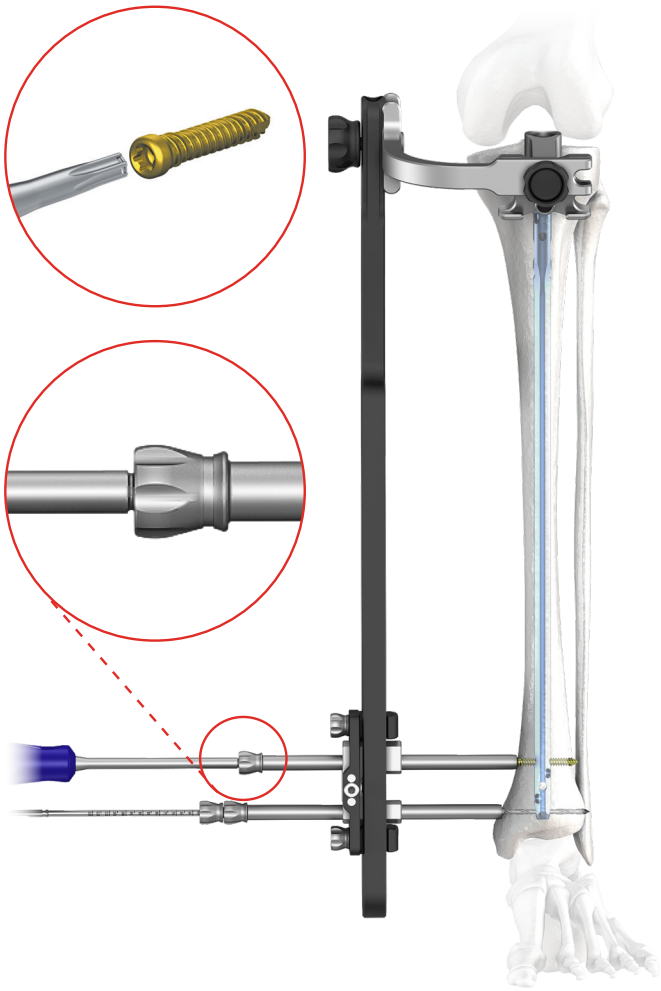

35 Remove the drill with scale 3.5/350 **[40.5339.002]** and drill guide 7/3.5 **[40.5511.300]** from the other hole of the targeter slider, but leave the protective guide 9/7 **[40.5510.300]** in there.
Insert the screw length measure **[40.5530.400]** through the protective guide into the drilled hole until the end of measure reaches the "*exit*" of the hole. Read the length of the locking screw on the B-D scale. During the measurement the tip of the protective guide should rest on the bone.

Remove the screw length measure.
Leave the protective guide in the slider.

40.5339.002

40.5511.300

40.5510.300

40.5530.400

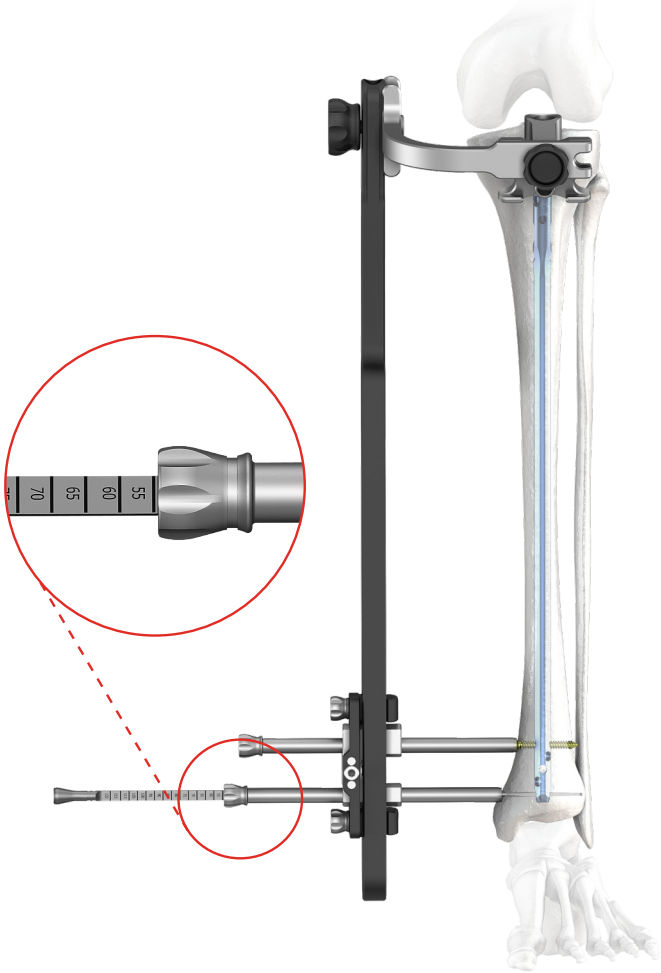

The above description is not detailed instruction of conduct. The surgeon decides about choosing the operating procedure.

36 Insert the tip of the screwdriver T25 **[40.5575.400]** into the socket of the selected locking screw. Then advance them both into the protective guide 9/7 **[40.5510.300]** and insert the locking screw into the prepared hole in the bone until the head of screw reaches the cortex bone (*the groove on the screwdriver shaft should match the edge of protective guide*). Remove the screwdriver, protective guides and targeter D **[40.5302.200]**.

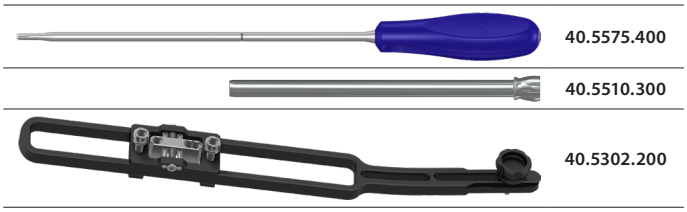

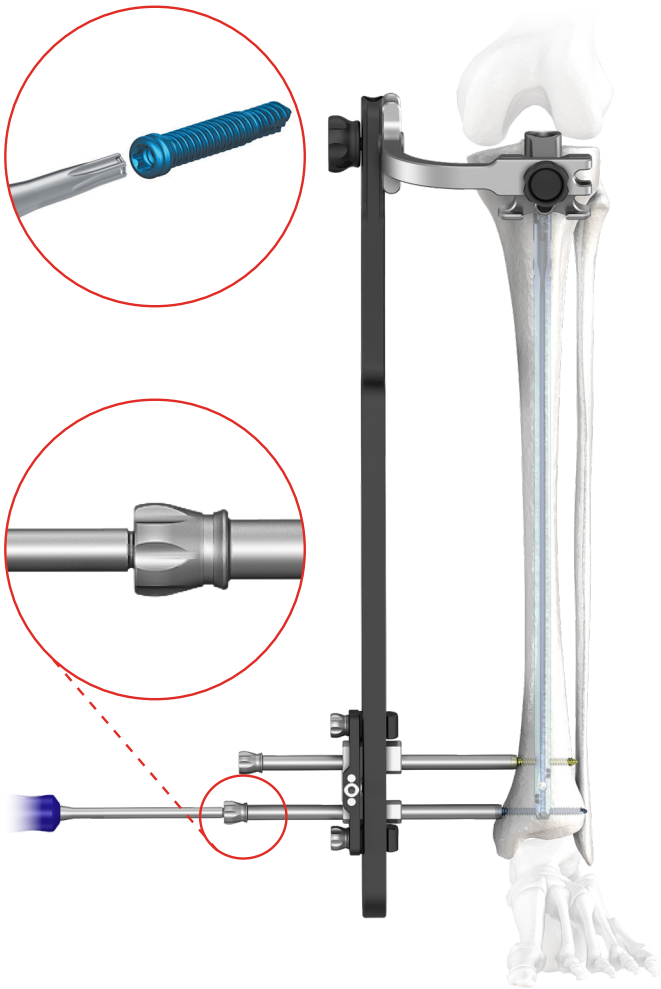

	Diameter of intramedullary nail			
	Ø8 and Ø9 mm		**Ø10 mm and larger**	
	Standard locking	Standard locking with angular stabilization	Standard locking	Standard locking with angular stabilization
Round hole	**CHARFIX2** Distal screw 4.0 (*turquoise*) 	**CHARFIX2** Distal screw 4.5 (*brown*) 	**CHARFIX2** Distal screw 5.0 (*gold*) 	**CHARFIX2** Distal screw 5.5 (*blue*) 
Oval hole	**CHARFIX2** Distal screw 4.0 (*turquoise*) 		**CHARFIX2** Distal screw 5.0 (*gold*) 	

The above description is not detailed instruction of conduct. The surgeon decides about choosing the operating procedure.

II.6. PROXIMAL LOCKING OF INTRAMEDULLARY NAIL

CHARFIX2 tibial nail has 5 holes in its proximal part. The decision regarding the number and place of locking screws to be inserted depends on the fracture and is made by the surgeon.

II.6.1. Dynamic fixation and dynamic fixation with compression (*compressive fixation*)

Proximal part of the targeter B **[40.8539]** has two lateral holes for locking the nail in the oval-shaped hole.

For dynamic fixation or dynamic fixation with compression, the proximal locking of the nail should be performed through the proximal targeter hole (*the oval-shaped hole in the intramedullary nail*).

40.8539.000

37 Insert the protective guide 9/7 **[40.5510.300]** together with trocar 6.5 **[40.5534.200]** into the proximal part of the targeter. Mark the entry point for the locking screw, then perform incision through the soft tissues along the marked point of a length of about 1.5 cm. Advance the protective guide with trocar into the incision to place it as close to the bone as possible. Use trocar to mark the entry point for the drill.

Remove the trocar.
Leave the protective guide in the targeter hole.

40.5510.300

40.5534.200

38 Insert the drill guide 7/3.5 **[40.5511.300]** into the protective guide 9/7 **[40.5510.300]**. Use the electric drive and a drill with scale 3.5/350 **[40.5339.002]**, led via the drill guide, to drill an opening in the tibia that goes through its both cortical layers. The scale on the drill indicates the length of the locking element.

Drill under X-Ray control.

Remove the drill and drill guide.
Leave the protective guide in the targeter hole.

	40.5510.300
	40.5511.300
	40.5339.002

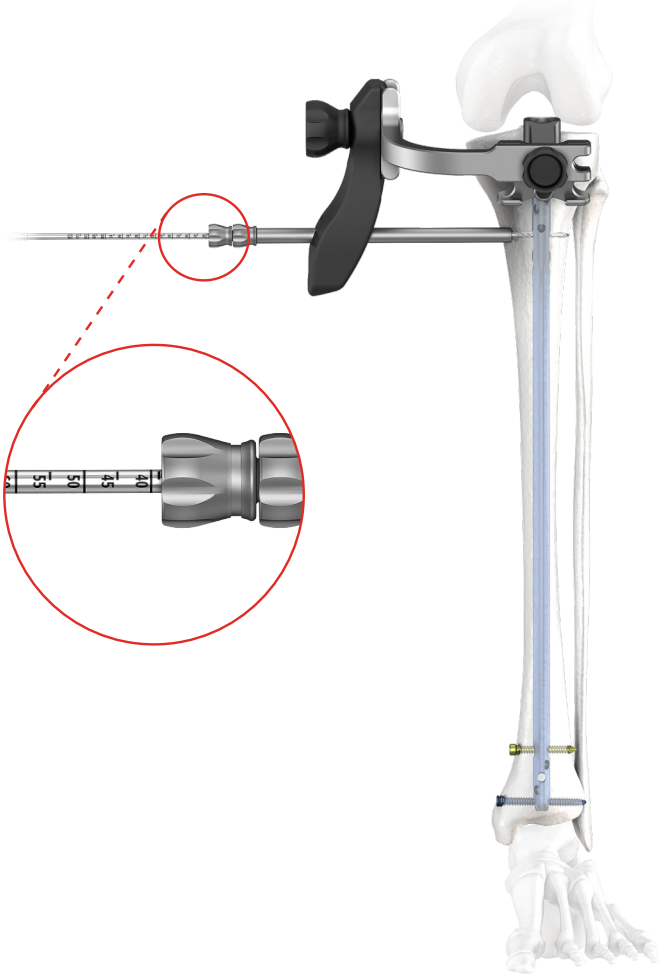

39 Insert the screw length measure **[40.5530.400]** through the protective guide 9/7 **[40.5510.300]** into the drilled hole until the end of measure reaches the *„exit"* of the hole. Read the length of he locking screw on the B-D scale.
During the measurement, the tip of the protective guide should rest on the bone.

Remove the screw length measure.
Leave the protective guide in the targeter hole.

	40.5510.300
	40.5530.400

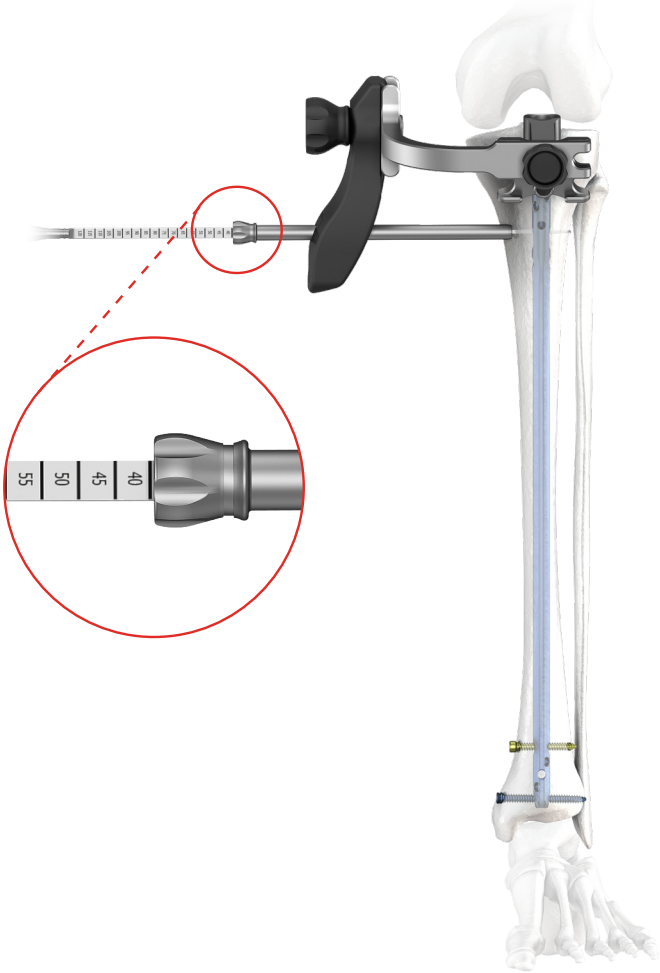

The above description is not detailed instruction of conduct. The surgeon decides about choosing the operating procedure.

40 Insert the tip of the screwdriver T25 [**40.5575.400**] into the socket of the selected locking screw. Then advance them both into the protective guide 9/7 [**40.5510.300**] and insert the locking screw into the prepared hole in the bone until the head of screw reaches the cortex bone (*the groove on the screwdriver shaft should match the edge of protective guide*).

Remove the screwdriver and protective guide.

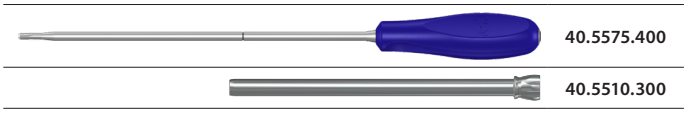

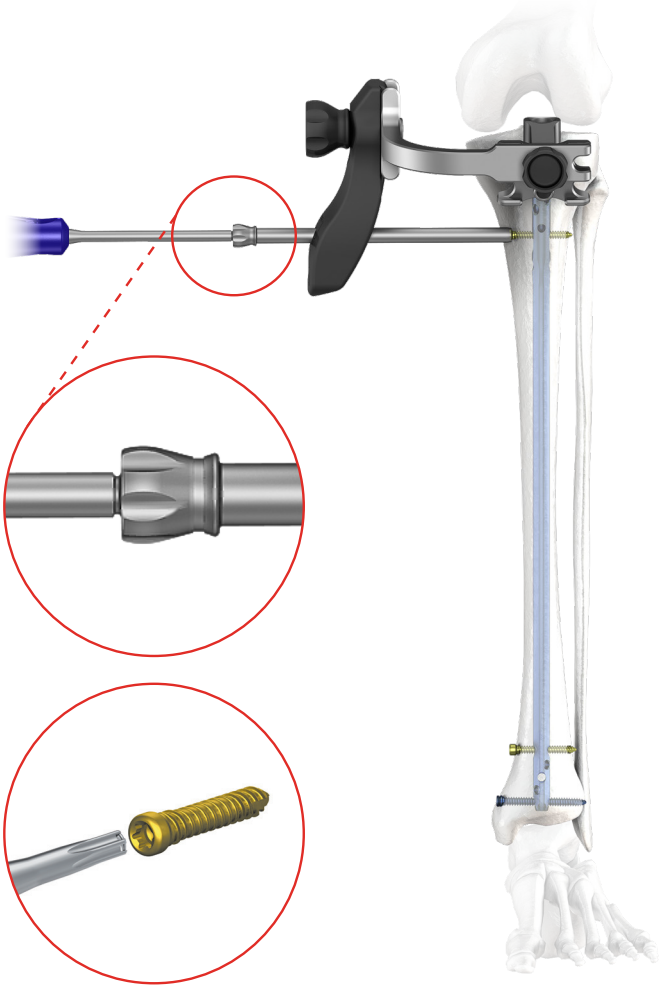

II.6.2. Intraoperative compression of fracture fragments

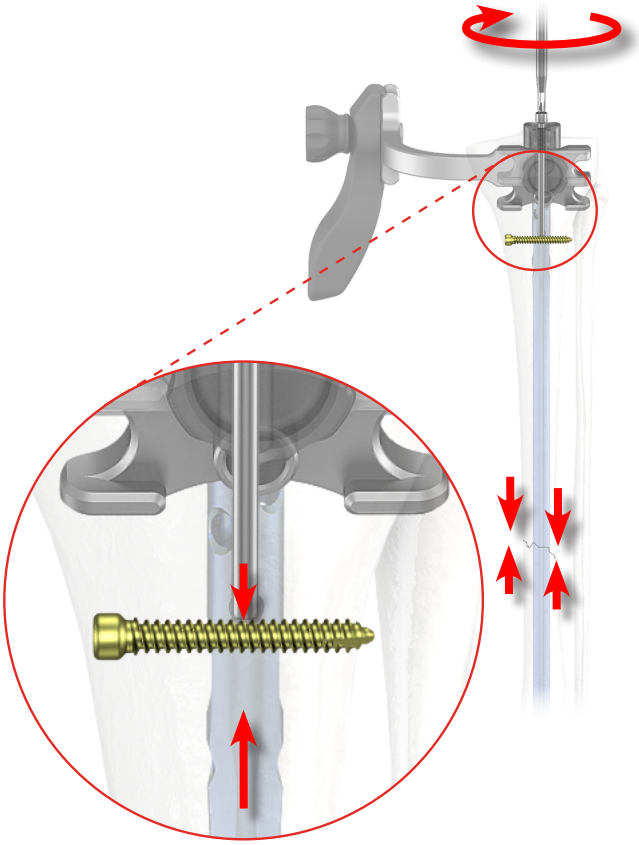

41 The targeter arm **[40.6573]** allows for intraoperative compression of bone fragments without the necessity to detach the targeter from the nail. It is possible thanks to the compression screw **[40.5313.100]** inserted into the connecting screw **[40.5306.100]**. To perform the compression, the distal fragment should be locked in any nail hole, while the proximal fragment should be locked in the oval-shaped hole in the proximal part.

Nail locking in the distal part should be performed in accordance with steps 17-25
Nail locking in the proximal part should be performed in accordance with steps 37-40.

Use the screwdriver T25 **[40.5575.400]** to insert the compression screw, until the resistance is felt, into the connecting screw, which is used to connect the targeter arm with the intramedullary nail. Further screwing-in causes bone fragments compression by 1mm at each screw turn.

40.6573.000

40.5313.100

40.5306.100

40.5575.400

42 After compression is performed, the nail may be locked in the proximal part with the other lateral hole of the nail using the targeter B **[40.8539]**.

For locking in the reconstruction and oblique holes, when using the reconstruction targeter **[40.6572]**, remove the compression screw **[40.5313.100]**.

40.8539.000

40.6572.000

40.5313.100

The above description is not detailed instruction of conduct. The surgeon decides about choosing the operating procedure.

II.6.3. Static fixation

When using the static fixation, it is recommended to lock the nail in the proximal part with two screws. In each case of locking the nail, the distally located round hole shall be used.

43 Insert the protective guide 9/7 [**40.5510.300**] together with trocar 6.5 [**40.5534.200**] into the distally located hole in the targeter B [**40.8539**] marked as STAT. Use the trocar to mark on the skin the incision point of soft tissues Perform about 1.5cm incision. Advance the protective guide with trocar into the incision to place it as close to the bone as possible. Use the trocar to mark the entry point for the drill.

Remove the trocar.
Leave protective guide in the targeter hole.

40.8539.000

40.5510.300

40.5534.200

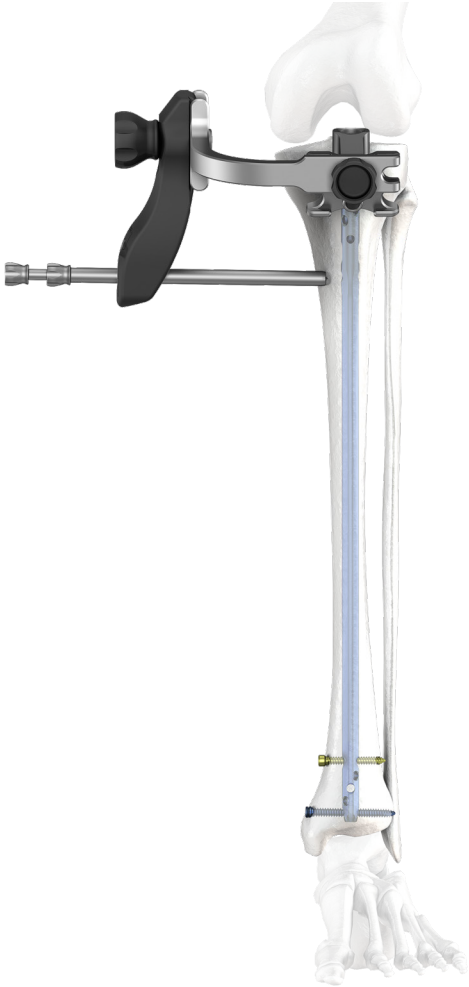

44 Insert the drill guide 7/3.5 [**40.5511.300**] into the protective guide 9/7 [**40.5510.300**]. Use the electric drive and drill with scale 3.5/350 [**40.5339.002**], led via the drill guide, to drill an opening in the tibia that goes through its both cortical layers.
The scale on the drill indicates the length of the locking element.

Remove the drill and drill guide.
Leave the protective guide in the targeter hole.

Drill under X-Ray control.

	40.5510.300
	40.5511.300
	40.5339.002

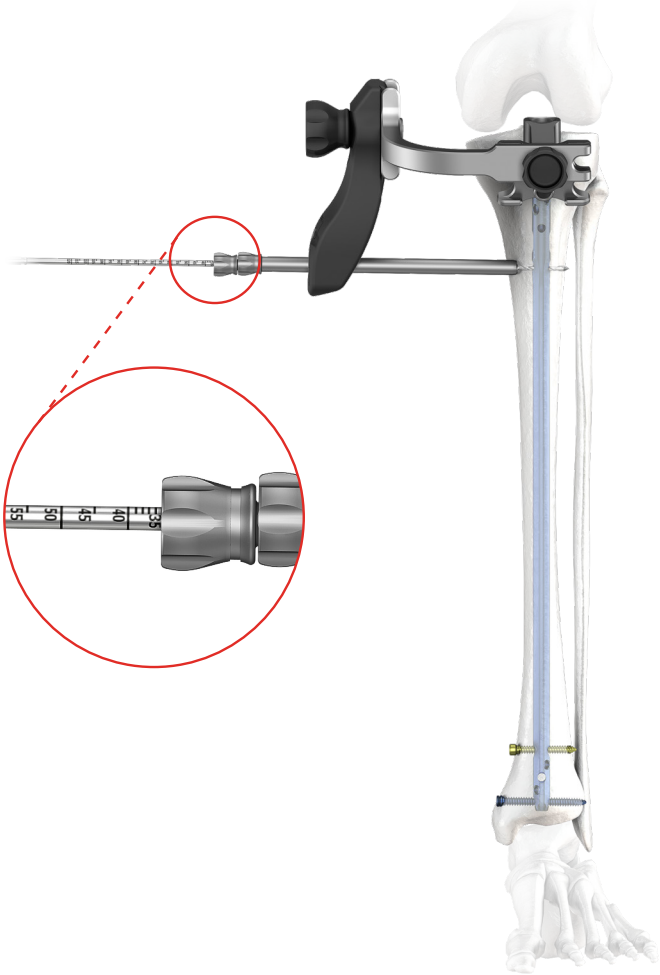

45 Insert the screw length measure [**40.5530.400**] through the protective guide 9/7 [**40.5510.300**] into the drilled hole until the end of measure reaches the "*exit*" of the hole. Read the length of the locking screw on the B-D scale.
During the measurement, the tip of the protective guide should rest on the bone.

Remove the screw length measure.
Leave the protective guide in the targeter hole.

	40.5510.300
	40.5530.400

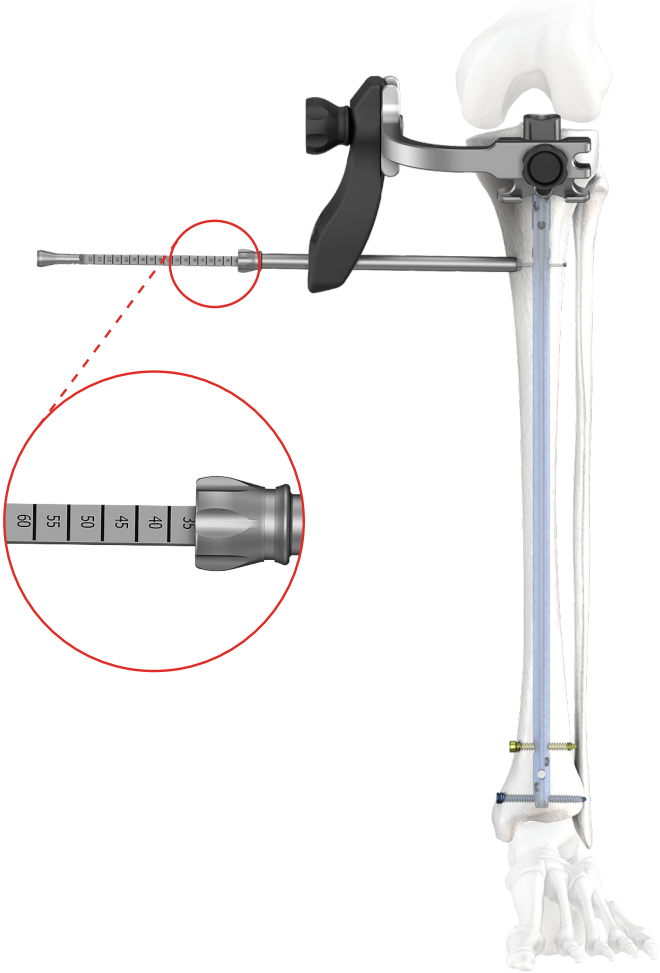

The above description is not detailed instruction of conduct. The surgeon decides about choosing the operating procedure.

46 The following screws may be used to lock the nail:

	Diameter of intramedullary nail			
	Ø8 and Ø9 mm		Ø10 mm and larger	
	Standard locking	Standard locking with angular stabilization	Standard locking	Standard locking with angular stabilization
Round hole	**CHARFIX2** Distal screw 4.0 (*turquoise*) 	**CHARFIX2** Distal screw 4.5 (*brown*) 	**CHARFIX2** Distal screw 5.0 (*gold*) 	**CHARFIX2** Distal screw 5.5 (*blue*) 
Oval hole	**CHARFIX2** Distal screw 4.0 (*turquoise*) 		**CHARFIX2** Distal screw 5.0 (*gold*) 	

47 Insert the tip of the screwdriver T25 **[40.5575.400]** into the socket of the selected locking screw. Then advance them both into the protective guide 9/7 **[40.5510.300]** and insert the locking screw into the prepared hole in the bone until the head of screw reaches the cortex bone (*the groove on the screwdriver shaft should match the edge of protective guide*). Remove the screwdriver and protective guide.

40.5575.400

40.5510.300

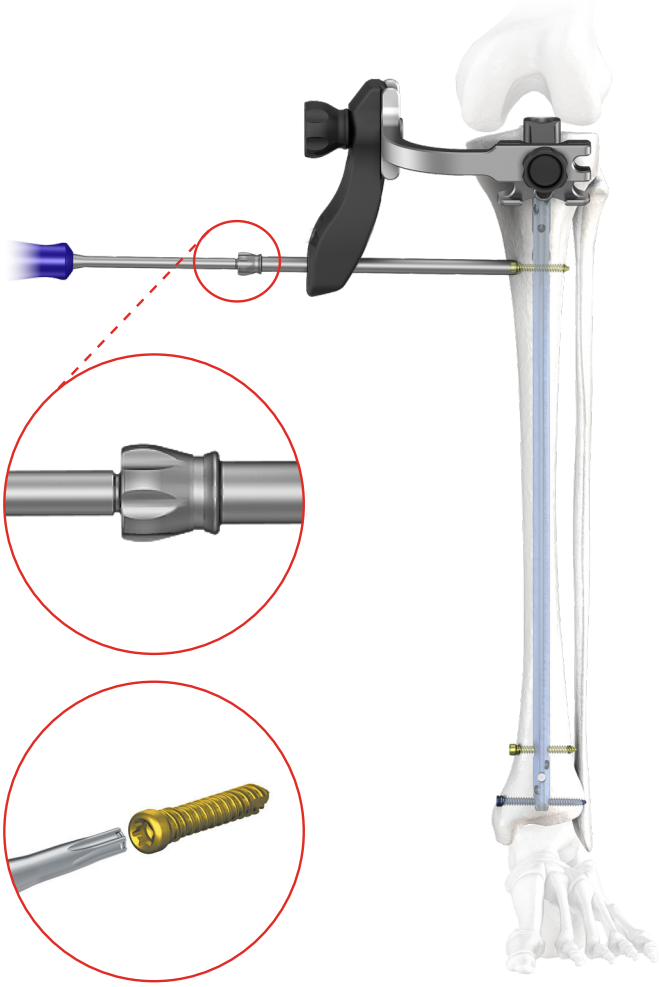

48 The nail may be locked in the proximal part with a second locking screw using the central hole of the targeter B **[40.8539]**.

Nail locking should be performed in accordance with steps 43-47.

40.8539.000

II.6.4. Static fixation with delayed dynamization

When using the static fixation, it is recommended to lock the nail in its proximal part with two screws - dynamically in the oval-shaped hole and statically in the round hole below the oval-shaped hole. The delayed dynamization is obtained in the subsequent period by removing the locking screw from the round hole.

49 Insert the protective guide 9/7 **[40.5510.300]** with trocar 6.5 **[40.5534.200]** into the proximal hole of the targeter B. Use the trocar to mark on the skin the incision point of soft tissues. Perform the incision of about 1.5cm. Advance the protective guide with trocar into the incision to place it as close to the bone as possible. Use the trocar to mark the entry point for the drill.

Remove the trocar.
Leave the protective guide in the targeter hole.

	**40.5510.300**
	**40.5534.200**

The above description is not detailed instruction of conduct. The surgeon decides about choosing the operating procedure.

50 Insert the drill guide 7/3.5 [**40.5511.300**] into the protective guide 9/7 [**40.5510.300**]. Use the electric drive and drill with scale 3.5/350 [**40.5339.002**], led via the drill guide, to drill an opening in the tibia that goes through its both cortical layers. The scale on the drill indicates the length of the locking element.

Drill under X-Ray control.

Remove the drill and drill guide.
Leave the protective guide in the targeter hole.

	**40.5510.300**
	**40.5511.300**
	40.5339.002

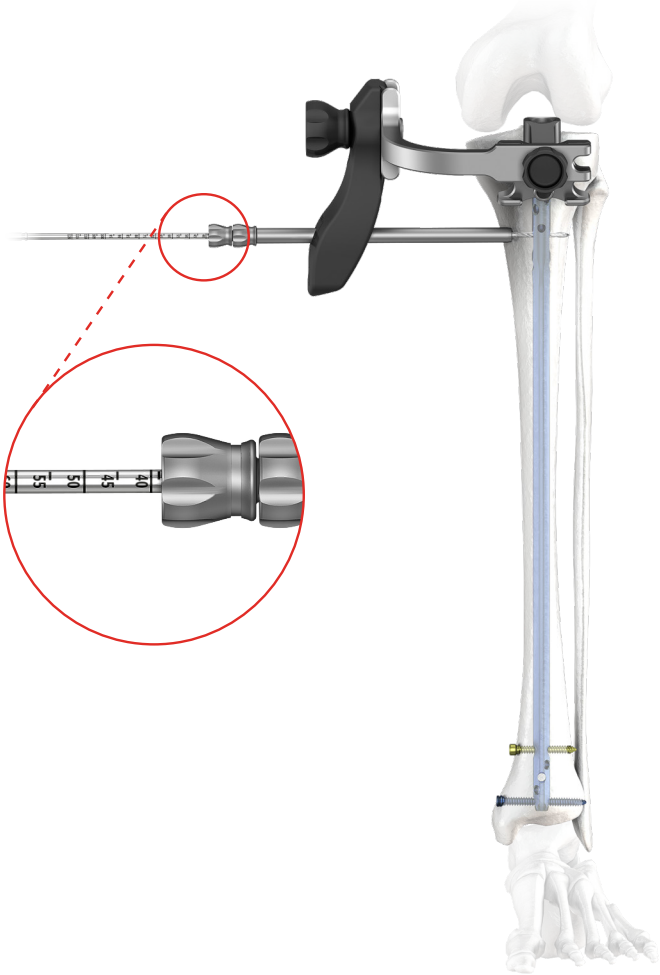

51 Insert the screw length measure [**40.5530.300**] through the protective guide 9/7 [**40.5510.300**] into the drilled hole until the end of measure reaches the "*exit*" of the hole. Read the length of the locking screw on the B-D scale.
During the measurement, the tip of the protective guide should rest on the cortical layer of bone.

Remove the screw length measure.
Leave the protective guide in the targeter hole.

	**40.5510.300**
	**40.5530.400**

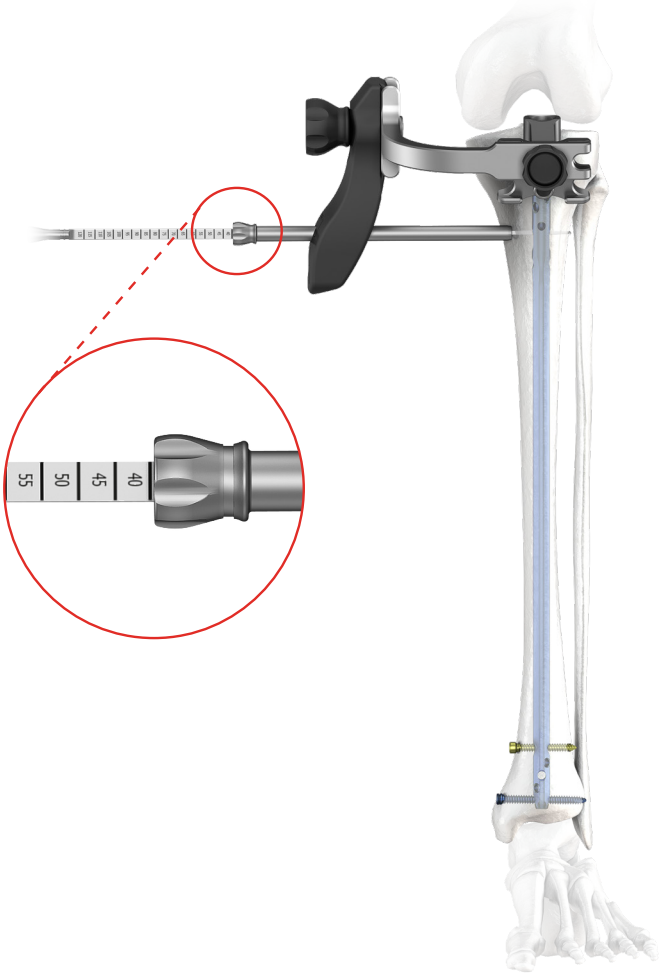

52 Insert the tip of the screwdriver T25 **[40.5575.400]** into the socket of the selected locking screw. Then advance them both into the protective guide 9/7 **[40.5510.300]** and insert the locking screw into the prepared hole in the bone until the head of screw reaches the cortex bone (*the groove on the screwdriver shaft should match the edge of protective guide*).

Remove the screwdriver and protective guide.

40.5575.400

40.5510.300

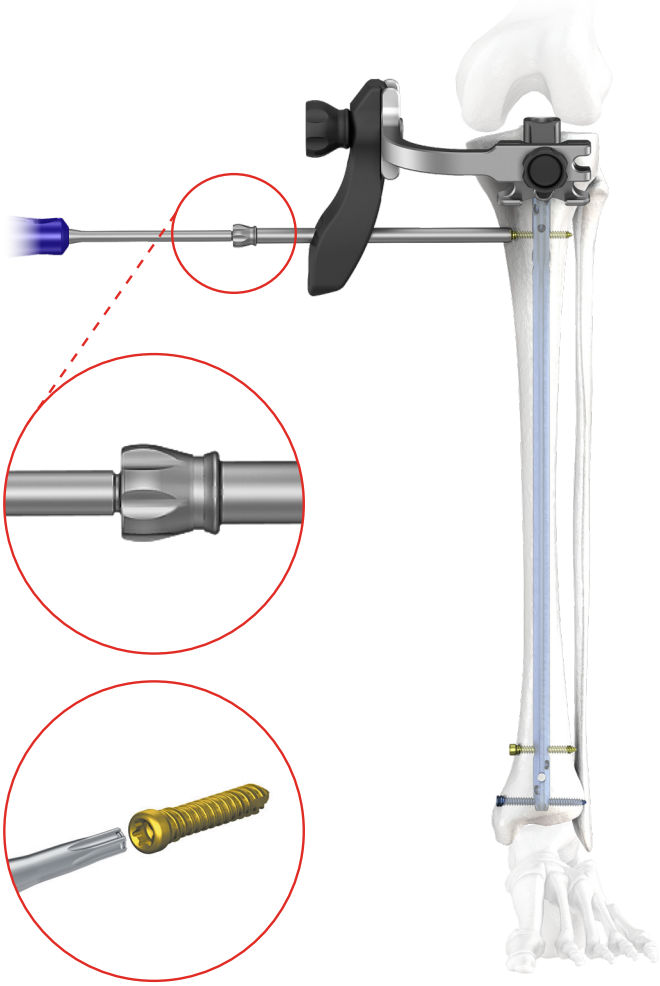

53 The nail may be locked in the proximal part with the other locking screw using the distal hole of the targeter B **[40.8539]** marked as STAT.

Nail locking should be performed in accordance with steps 43-47.

40.8539.000

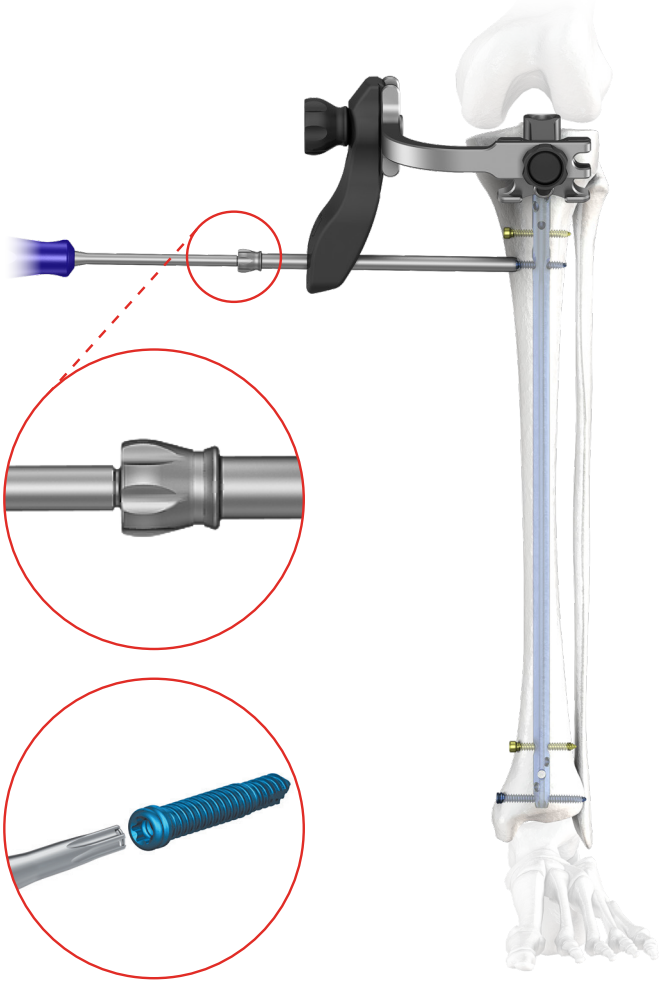

The above description is not detailed instruction of conduct. The surgeon decides about choosing the operating procedure.

II.6.5. Reconstructive and oblique fixation

In order to lock the tibial nail in the reconstruction holes, install the reconstruction targeter **[40.6572]** onto the targeter arm **[40.6573]**.

40.6573.000

40.6572.000

54 For reconstructive stabilization, there are two holes in the reconstruction targeter located on the targeter arms.

55 For oblique stabilization, there is a single hole in the reconstruction targeter located centrally.

II.6.5.A. Reconstructive fixation

56 Attach the reconstruction targeter **[40.6572]** to the targeter arm **[40.6573]**.

Insert the protective guide 9/7 **[40.5510.300]** with trocar 6.5 **[40.5534.200]** into the selected hole of the reconstruction targeter. Use the trocar to mark on the skin the incision point of soft tissues. Perform the incision of about 1.5cm. Advance the protective guide with trocar into the incision to place it as close to the bone as possible. Use the trocar to mark the entry point for the drill.

Remove the trocar. Leave the protective guide in the targeter hole.

40.6572.000

40.6573.000

40.5510.300

40.5534.200

57 Insert the drill guide 7/3.5 **[40.5511.300]** into the protective guide 9/7 **[40.5510.300]**. Use the electric drive and drill with scale 3.5/350 **[40.5339.002]**, led via the drill guide, to drill an opening in the tibia that goes through its both cortical layers. The scale on the drill indicates the length of the locking element.

Drill under X-Ray control.

Remove the drill and drill guide.
Leave the protective guide in the targeter hole.

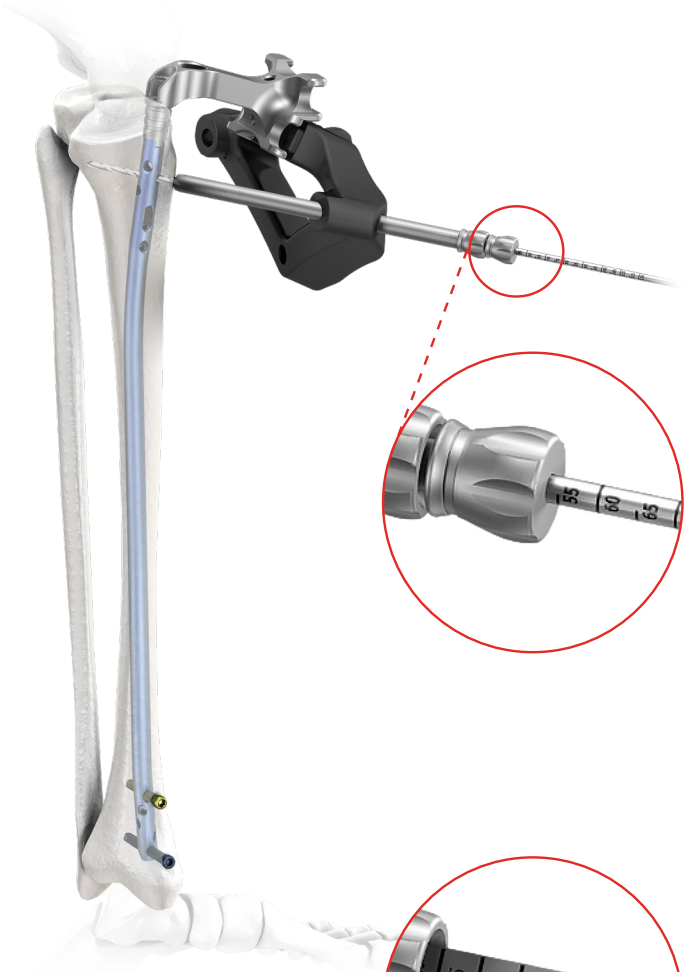

58 Insert the screw length measure **[40.5530.400]** through the protective guide 9/7 **[40.5510.300]** into the drilled hole until the end of measure reaches the "*exit*" of the hole. Read the length of the locking screw on the B-D scale.
During the measurement, the tip of the protective guide should rest on the bone.

Remove the screw length measure.
Leave the protective guide in the targeter hole.

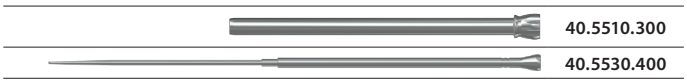

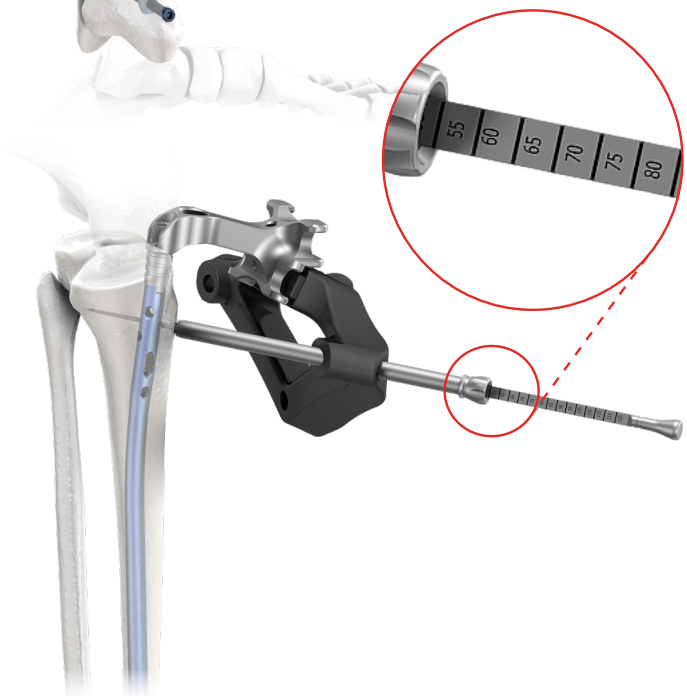

59 The following screws may be used to lock the nail:

	Diameter of intramedullary nail			
	Ø8 and Ø9 mm		**Ø10 mm and larger**	
	Standard locking	Standard locking with angular stabilization	Standard locking	Standard locking with angular stabilization
Round hole	**CHARFIX2** Distal screw 4.0 (*turquoise*)	**CHARFIX2** Distal screw 4.5 (*brown*)	**CHARFIX2** Distal screw 5.0 (*gold*)	**CHARFIX2** Distal screw 5.5 (*blue*)
				
Oval hole	**CHARFIX2** Distal screw 4.0 (*turquoise*)		**CHARFIX2** Distal screw 5.0 (*gold*)	
				

The above description is not detailed instruction of conduct. The surgeon decides about choosing the operating procedure.

60 Insert the tip of the screwdriver T25 [**40.5575.400**] into the socket of the selected locking screw. Then advance them both into the protective guide 9/7 [**40.5510.300**] and insert the locking screw into the prepared hole in the bone until the head of screw reaches the cortex bone (*the groove on the screwdriver shaft should match the edge of protective guide*). Remove the screwdriver and protective guide.

Nail locking in the other reconstruction hole should be performed in accordance with steps 56-60.


40.5575.400


40.5510.300

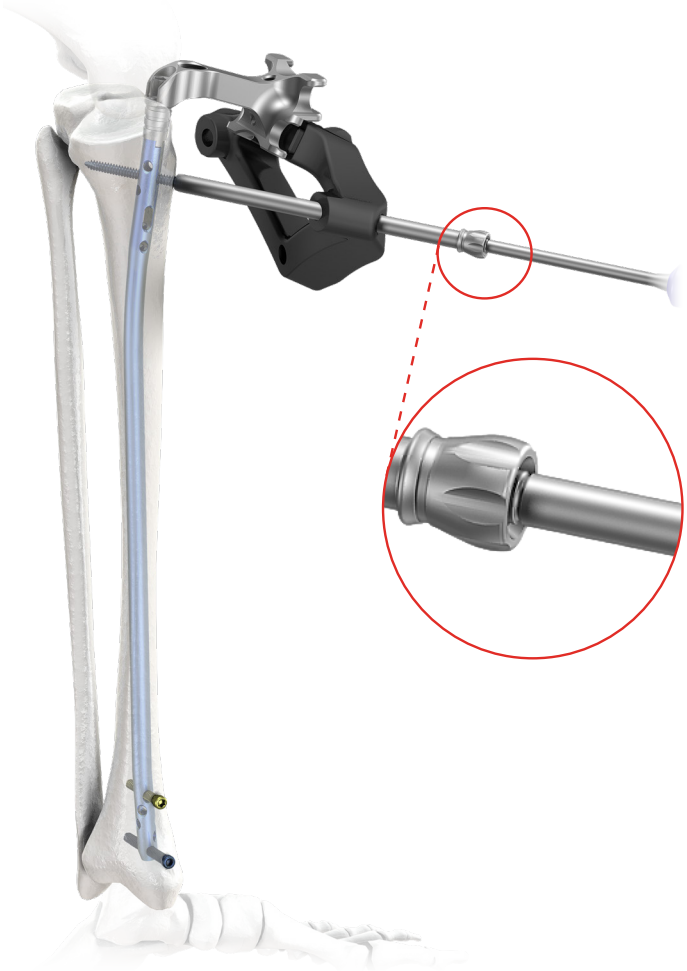

II.6.5.B. Oblique fixation

61 For oblique fixation, use the reconstruction targeter [**40.6572**] installed on the targeter arm [**40.6573**].
Insert the protective guide 9/7 [**40.5510.300**] with the trocar 6.5 [**40.5534.200**] into the central hole of the reconstruction targeter. Use the trocar to mark on the skin the incision point of soft tissues. Perform the incision of about 1.5 cm. Advance the protective guide with trocar into the incision to place it as close to the bone as possible. Use the trocar to mark the entry point for the drill.

Remove the trocar.
Leave the protective guide in the targeter hole.

Further procedures should be performed in accordance with steps 57-60.


40.6572.000


40.6573.000


40.5510.300


40.5534.200

II.7. COMPRESSION SCREW OR END CAP INSERTION

Use the wrench S8 **[40.5304.200]** to remove the connecting screw **[40.5306.100]** from the implanted nail. Remove all the targeters from the nail locked in the medullary canal.

40.5304.200

40.5306.100

40.6573.000

40.6572.000

40.6571.000

40.8539.000

The above description is not detailed instruction of conduct. The surgeon decides about choosing the operating procedure.

Insertion of the compression screw or end cap

62 OPTION I: Insert the compression screw for dynamic fixation with compression (*compressive fixation*). Use the screwdriver T25 **[40.5575.400]** to insert the compression screw (*implant*) into the threaded hole of the nail shaft.

40.5575.400

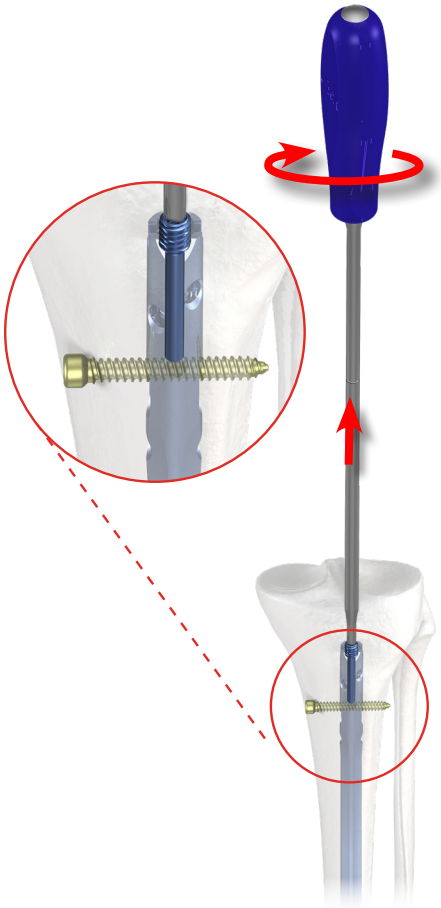

63 OPTION II: Insert the end cap for dynamic and static fixation. To secure the internal thread of the nail against the bone tissue ingrowth, use the screwdriver T25 to insert the end cap (*implant*) into the threaded hole of the nail shaft.

40.5575.400

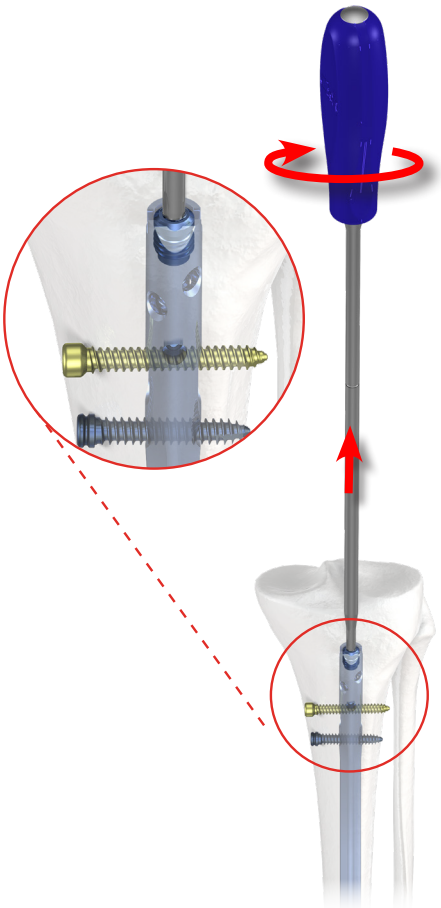

III. LOCKING THE NAIL WITH USE OF PROTECTIVE GUIDE SHORT AND FREEHAND TECHNIQUE

III.1. LOCKING THE NAIL WITH USE OF PROTECTIVE GUIDE SHORT

For this method, a constant radiological control is required to determine the drilling site and drilling process. For drilling, it is recommended to use an angular drill attachment, so the operator's hands are outside the field of direct X-Ray exposure. After marking the points, perform the incision of soft tissues of about 1.5cm long.

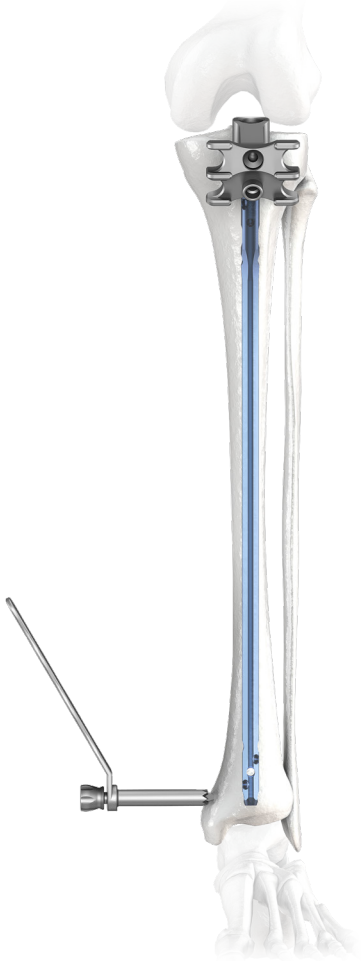

64 Use the image intensifier to establish the position of the protective guide short [**40.5871.100**] in relation to the holes in the nail. The holes in the nail and guide must coincide. The teeth of the guide must be sunk in the cortical layer of bone. Insert the trocar short 7 [**40.1354.200**] into the guide and advance until the cortical layer is reached. Mark the entry point for the drill.

Remove the trocar.
Leave the guide in place.

40.5871.100

40.1354.200

65 Insert the drill guide short 7/3.5 [**40.5872.100**] into the hole of guide [**40.5871.100**]. Use the electric drive and drill with scale 3.5/150 [**40.5343.002**] or drill with scale 3.5/350 [**40.5339.002**], led via the drill guide, to drill an opening in the tibia that goes through its both cortical layers. The scale on the selected drill indicates the length of the locking element.

Drill under X-Ray control.

Remove the drill and drill guide.
Leave the guide in place.

40.5871.100

40.5872.100

40.5343.002

40.5339.002

The above description is not detailed instruction of conduct. The surgeon decides about choosing the operating procedure.

66 Insert the screw length measure **[40.5530.400]** through the protective guide short **[40.5871.100]** into the drilled hole until the end of measure reaches the "*exit*" of the hole. Read the length of the locking screw on the D scale.

Remove the screw length measure.

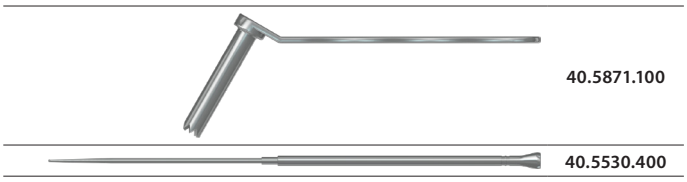

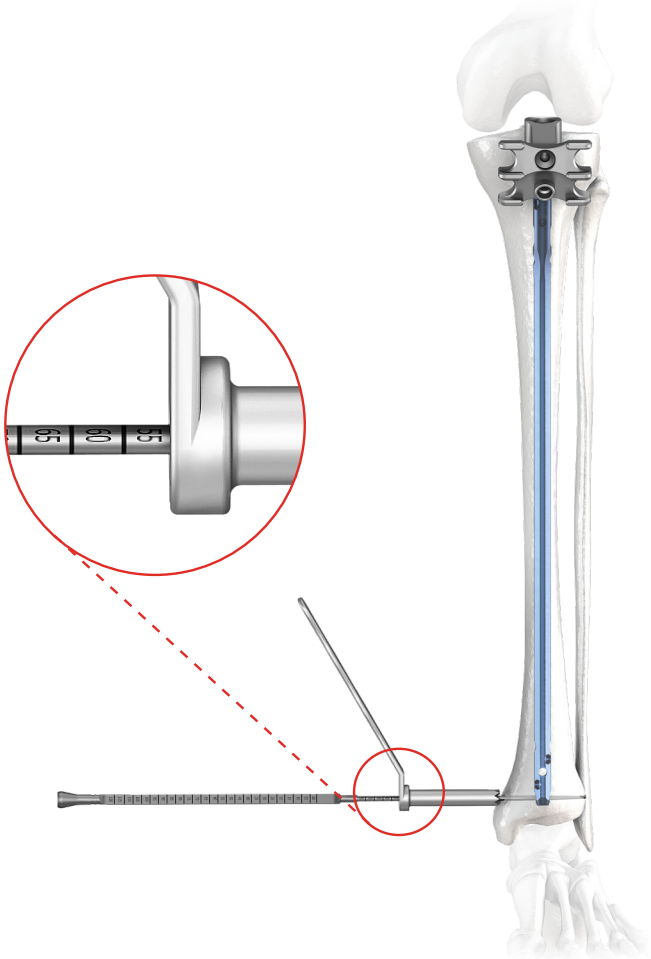

67 Insert the tip of the screwdriver T25 **[40.5575.400]** into the socket of the selected locking screw. Then advance them both into the hole of guide **[40.5871.100]** and insert the locking screw into the prepared hole in the bone until the head of screw reaches the cortical layer of bone.

Remove the screwdriver and the guide.

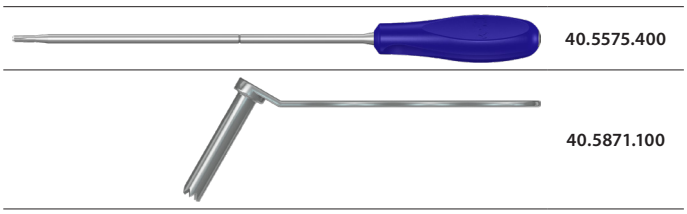

III.2. FREEHAND TECHNIQUE LOCKING

For this method, a constant radiological control is required to determine the drilling site and drilling process. For drilling, it is recommended to use an angular drill attachment, so the operator's hands are outside the field of direct X-Ray exposure. After marking the points, perform the incision of soft tissues of about 1.5cm long.

Use the image intensifier to establish the position of the drill in relation to the hole in the nail.

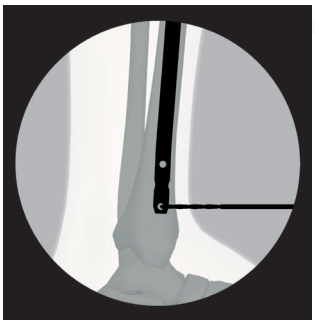

68 Use the drill with scale 3.5/150 [**40.5343.002**] to make a hole going through both cortical layers and the hole in the nail. Remove the drill.

40.5343.002

69 Insert the hole depth measure [**40.2665.100**] into the drilled hole until the end of measure reaches the "*exit*" of the hole. Read the length of the locking screw on the scale.

40.2665.100

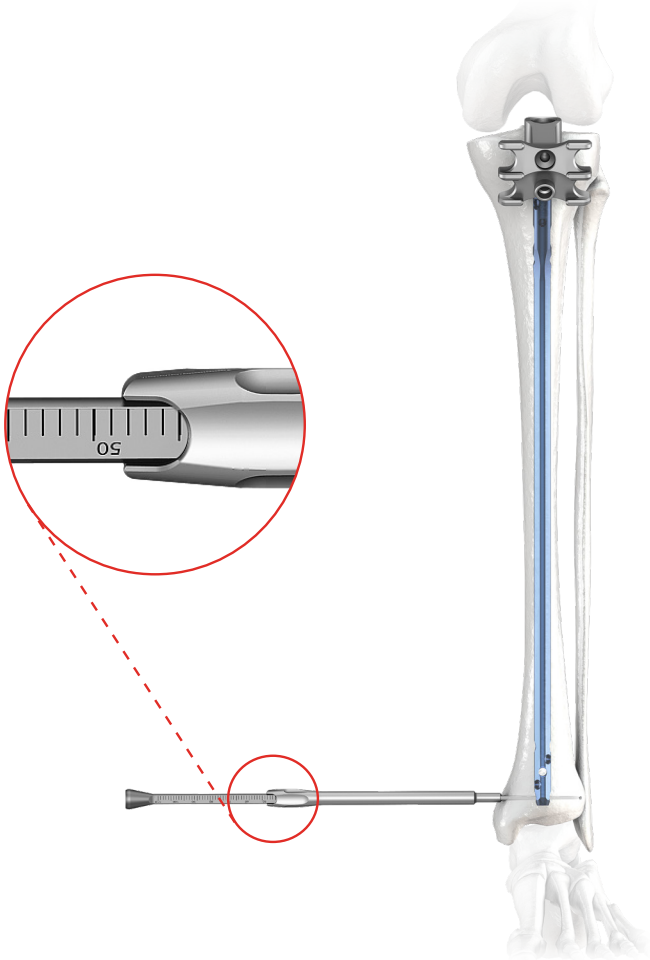

The above description is not detailed instruction of conduct. The surgeon decides about choosing the operating procedure.

70 Insert the tip of the screwdriver T25 [**40.5575.400**] into the socket of the selected locking screw. Then advance them both and insert the locking screw into the prepared hole in the bone until the head of screw reaches the cortical layer of bone.

40.5575.400

IV. NAIL EXTRACTION

71 Open the canal using the curved awl 8.0 [**40.5523.100**].
Insert the awl at the angle of 10° in relation to the main axis of the medullary canal.

40.5523.100

72 Use the screwdriver T25 **[40.5575.400]** to remove the end cap (*or compression screw*) and all locking screws.

40.5575.400

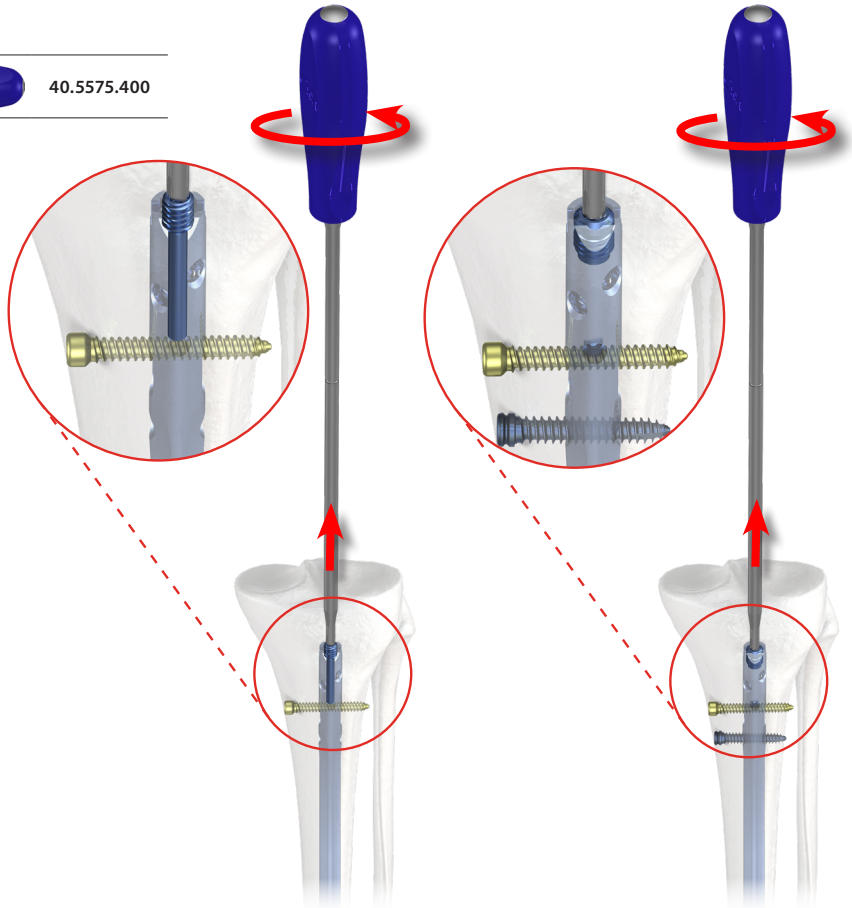

73 Insert the connector M8x1,25/M14 **[40.5309.100]** into the threaded hole in the nail shaft. Attach the impactor-extractor **[40.5308.100]** to the connector and use the mallet **[40.3667]** to remove the nail from the medullary canal.

40.5309.100

40.5308.100

40.3667.000

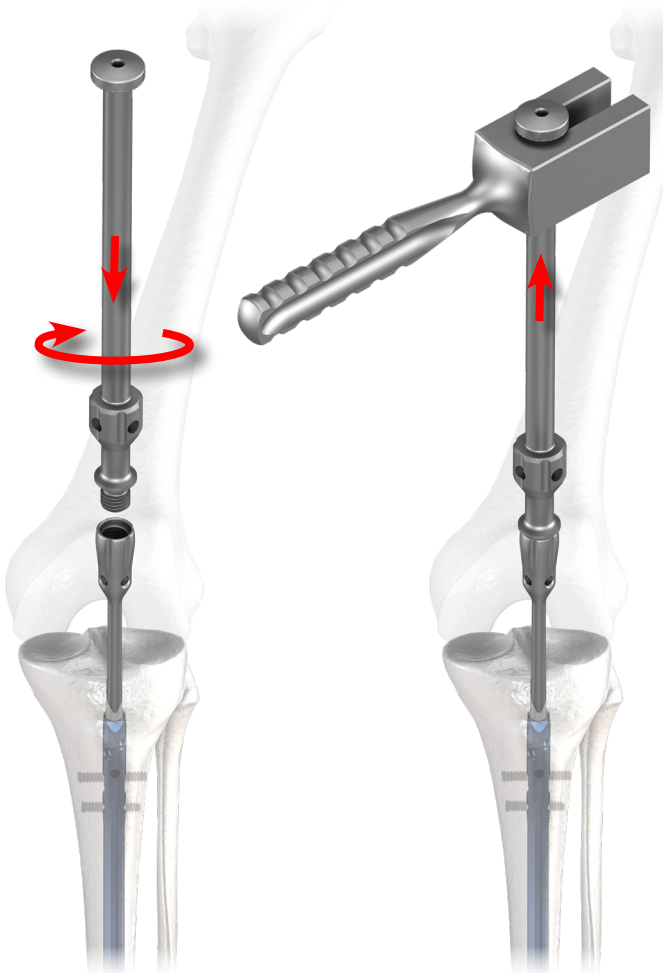

The above description is not detailed instruction of conduct. The surgeon decides about choosing the operating procedure.

ChM sp. z o.o.
Lewickie 3b
16-061 Juchnowiec Kościelny
Polska
tel. +48 85 86 86 100
fax +48 85 86 86 101
chm@chm.eu
www.chm.eu

CE 0197